Combined Service Manual

HP LaserJet 4 / 4M (C2001A / C2021A)

HP LaserJet 4 Plus / 4M Plus (C2037A / C2039A)

HP LaserJet 5 / 5M /5N (C3916A/C3917A/ C3952A)

© Copyright
Hewlett-Packard
Company 1996

All Rights Reserved.
Reproduction, adaptation, or translation without prior written permission is prohibited, except as allowed under the copyright laws.

Publication number
C3916-90984

First edition, March 1996

Printed in USA

Warranty

The information contained in this document is subject to change without notice.

Hewlett-Packard makes no warranty of any kind with regard to this material, including, but not limited to, the implied warranties or merchantability and fitness for a particular purpose.

Hewlett-Packard shall not be liable for errors contained herein or for incidental or consequential damaged in connection with the furnishing, performance, or use of this material.

WARNING

Electrical Shock Hazard

To avoid electrical shock, use only supplied power cords and connect only to properly grounded (3-hole) wall outlets.

Hewlett-Packard Company
11311 Chinden Boulevard
Boise, Idaho 83714

Conventions

This manual uses the following conventions:

Unless specifically stated otherwise, information applies to all seven printer models (LaserJet 4/4 Plus/4 M/4 M Plus/5/5 M/5 N). Most procedures are combined for all printers, except where they differ substantially.

Color is used to emphasize items which are important to the material under discussion.

The names of major printer parts and assemblies are Capitalized.

Bold is used for emphasis, particularly in situations where *italic* type would be confusing.

Italic type is used to indicate related documents or emphasis.

`COMPUTER` type indicates text as seen on a computer monitor.

`DISPLAY` type indicates text as seen on the printer's 16 character LCD display panel (LaserJet 4Plus/4MPlus only).

KEYFACE indicates keys on a computer keyboard or on the printer's control panel. Examples include Enter, On Line and Go.

Note Notes contain important information set off from the text.

CAUTION Caution messages alert you to the possibility of damage to equipment or loss of data.

WARNING! Warning messages alert you to the possibility of personal injury.

Contents

1 Product Information

Product Family Information 1-2
Identification 1-3
Specifications 1-5
HP LaserJet 4 and 4 Plus 1-5
Related Documentation 1-7
Safety Information 1-8
Product and Laser Safety 1-8
FCC RFI Statement 1-9
Laser Statement (Sweden/Finland) 1-10
Toner Safety 1-11
Ozone Statement 1-11
Doing Business with HP 1-12
Technical Assistance 1-12
HP ASAP 1-800-333-1917 (U.S.) 1-12
HP FIRST 1-12
HP FIRST, U.S. 1-12
HP FIRST, Europe 1-12
HP AUDIO-TIPS 1-13
HP CompuServe Forum 1-13
Customer Information Centers 1-13
Customer Support Center (Assist Line) 1-13
Printer Drivers 1-13
European Customer Support Center 1-14
Other Areas 1-14

2 Site Planning and Requirements

Site Requirements 2-1
Printer Space Requirements 2-2
Print Media Specifications 2-3
Adhesive Labels 2-5
Label Construction 2-5
Overhead Transparencies 2-6
Envelopes 2-6
Envelope Construction 2-7

3 Configuration

Introduction 3-1
Using The Control Panel 3-2

Control Panel Keys 3-2
Reset Menu 3-5
Control Panel Menus 3-6
Printer Features 3-13
Page Protection (HP LaserJet 4 only) 3-13
Resource Saving (HP LaserJet 4 Plus and 5 only) . . 3-14
I/O Buffering (HP LaserJet 4 Plus and 5 only) 3-15
EconoMode (HP LaserJet 4 Plus and 5 only) 3-16
Resolution Enhancement (REt) 3-16
Memory Enhancement technology (MEt)
(HP LaserJet 4 Plus and 5 only) 3-17
Density 3-17
Network Security 3-18
Remote Control Panel (DOS) 3-18
HP LaserJet Utility (Macintosh) 3-18
HP JetAdmin Utility (Novell Networks) 3-19
Service Mode 3-20
Setting the Page Count 3-21
Setting the Cold Reset Default 3-22
Cold Reset 3-23
Understanding the PCL Self Test Printout 3-24
Changing the Control Panel Display Language 3-28
Test Print Button 3-29
System Configuration 3-31
MS-DOS System Configuration 3-31
Parallel DOS Commands 3-31
Serial MS-DOS Commands 3-32
Printer I/O Configuration 3-33
Parallel Menu 3-33
Advanced Functions 3-33
Serial Configuration 3-33
Serial Protocol 3-33
BAUD Rate 3-33
Pacing (Handshaking) 3-34
Serial Cable Pin-outs 3-35
DB-9 RS-232 Serial Connection — HP LaserJet 4 . . 3-35
DB-25 RS-232 Serial Connection — HP LaserJet 4
Plus/5 3-36
DB-25 Serial Connection — HP LaserJet 4 3-37
DB-25 RS-232 Serial Connection — HP LaserJet 4
Plus/5 3-38
RS-422A Serial Connection (Not available on the
HP LaserJet 4 Plus or 5 printers) 3-39
RS-422A Serial Configuration (LaserJet 4 only) . . . 3-39
Modular I/O Configuration 3-40

Printer Drivers 3-41
Install Printer Drivers and Utilities 3-41
How to Obtain Printer Drivers 3-41
DOS Utilities 3-42
Packing the Printer 3-43
Repackaging Instructions 3-43
Packing Checklist 3-43
Installing The Optional Lower Cassette 3-44
Loading Paper into the Optional Lower Cassette . . 3-45
Envelope Feeder Installation 3-49
LaserJet 4 and 4 Plus 3-50
LaserJet 5 3-50
SIMM Installation 3-51
Protecting the SIMM Board 3-51
Memory Requirements 3-53
Accessing the SIMM Slots 3-55
Installing the SIMM Boards 3-55
Testing a SIMM Board 3-57
Memory SIMM 3-57
Running a Self Test Printout 3-57
Personality SIMM
(PostScript) 3-58
Troubleshooting a SIMM Board 3-59
Service / Error Messages 3-59

4 Preventive Maintenance

Introduction 4-1
Life Expectancy of Consumables 4-2
Service Checkpoints 4-3
Cleaning Your Printer 4-4
Toner Cartridge 4-5
Saving Toner with EconoMode (HP LaserJet 4
Plus and 5 Only) 4-6
Storing the Toner Cartridge 4-6
Installing the Toner Cartridge 4-7
Non-HP Toner Cartridges 4-9
Clearing the TONER LOW Message 4-10
Periodic Maintenance Procedures 4-11
Removing the MP Tray (Tray 1) Pickup Roller and
Separation Pad 4-11
Removing the PC (Tray 2) Pickup Roller 4-13
Removing the Lower Cassette (LC) or (Tray 3)
Pickup Roller 4-14
Removing and Replacing the Transfer Roller 4-15

Removing the Transfer Roller 4-16
Replacing the Transfer Roller 4-16

5 Functional Overview

Introduction 5-1
DC Controller System 5-2
DC Controller Loads 5-3
Serial Data Communication 5-4
Solenoids 5-5
Photosensors 5-6
Microswitches 5-8
PC (Tray 2) and LC (Tray 3) Tray Size Sensing System 5-9
Motors 5-10
Paper Jam Detection 5-11
Formatter System 5-12
I/O Control 5-12
Memory Management 5-14
Data Processing 5-14
PJL Overview 5-15
Image Formation System 5-16
Photosensitive Drum 5-17
Drum Sensitivity 5-17
Cleaning Stage 5-18
Conditioning Stage 5-19
Writing Stage 5-20
Developing Stage 5-22
Transferring Stage 5-24
Fusing Stage 5-25
Paper Feed System 5-26
Printing from the MP Tray (Tray 1) 5-29
Printing from the PC Tray (Tray 2) 5-30
Power System 5-31
Basic Sequence of Operation 5-33
Standard Printer Operation 5-33
Timing Diagrams 5-34
Warmup Period 5-37
Standby Period 5-37
PowerSave 5-37
Initial Rotation Period 5-38
Print Period 5-40
Last Rotation Period 5-42

6 Removal and Replacement

Required Tools 6-2
Hardware Review 6-2
Removing the Covers 6-4
Right Side Cover Removal 6-4
Top Cover Removal 6-5
Left Side Cover Removal 6-7
Rear Door Removal 6-8
Font Door Cover Removal (LJ 5 Right Front Cover Removal) 6-10
Multi-Purpose (MP) Tray (Tray 1) Door Removal . . . 6-12
Multi-Purpose (MP) Tray (Tray 1) Removal 6-13
Assemblies Removal 6-15
Power Supply Removal 6-15
Paper Feed Assembly Removal 6-18
High Voltage Power Supply (HVPS) Removal 6-21
Fuser Assembly Removal 6-22
Control Panel and Overlay Removal 6-23
Removing the SIMMs Door 6-25
Formatter Cage Removal 6-27
Formatter PCA Removal 6-29
DC Controller Removal 6-33
DC Controller Installation 6-35
Main Motor Assembly Removal 6-37
Gear Assembly Removal 6-38
Fan Removal 6-39
Output Assembly Removal 6-41
Paper Exit Sensor (PS3) Removal 6-42
Scanner Assembly Removal 6-43
Lower Cassette Assemblies 6-44
Lower Cassette Sensor PCA Removal 6-44
Lower Cassette Pickup Motor Removal 6-45
Replacing Fuser Assembly Parts 6-47
Fuser Assembly Configuration 6-48
Removing the Fuser Roller Heat Lamp 6-49
Fuser Assembly Thermoswitch Removal 6-55
Thermistor Removal 6-56
Paper Control PCA Removal 6-59
Sensor PCA Removal 6-60
PS1 and PS2 Sensor Assembly Removal 6-61
High Voltage Contact Plate (HVCP) and Paper Guide Removal 6-62
Accessing the High Voltage Contact Plate and Feed Guide Assembly 6-62

Removing the High Voltage Contact Assembly and Feed Guide Assembly 6-67
Replacing the High Voltage Contact Assembly/Feed Guide Assembly 6-68
Interconnect PCA Removal 6-69

7 Troubleshooting

LaserJet 5 Error Map 7-A
Pre-Troubleshooting Procedures 7-1
Preliminary Operating Checks 7-1
Printer Message Troubleshooting 7-2
Printer Message Summary Table 7-2
Clearable Warnings 7-10
Printer Message Troubleshooting Procedures 7-12
Blank Display 7-12
MP/PC/LC (Tray 1/2/3) LOAD Message 7-13
Cassette Size Switches (SW603, SW604, SW605) Functional Check 7-15
Paper Size Sensing Lower Cassette 7-16
PC Empty Sensor (PS2) Functional Check 7-17
PS4 Check (MP Tray Empty Sensor) 7-17
12 Printer Open Message 7-18
SW601 Functional Check 7-19
13 PAPER JAM Message 7-20
PS1 (Input/Registration Sensor) Check 7-22
PS3 (Exit Sensor) Check 7-23
Pickup Motor Functional Test (M2) 7-23
Lower Cassette Functional Check 7-24
14 NO EP CART Message 7-25
16 Toner Low Message 7-25
41.X ERROR Message 7-27
50 SERVICE Error - Fuser Malfunction 7-29
51 ERROR Message 7-31
52 ERROR Scanner Malfunction 7-32
Laser/Scanner Assembly Functional Checks 7-32
57 (or 57.1) SERVICE Message (Main Motor Failure) 7-33
Main Motor Functional Checks 7-33
58 (or 57.2) SERVICE (Fan Failure) 7-34
Image Defect Summary 7-35
PS5 Check (MP Tray Paper End Sensor) Functional Test 7-44
Image Formation Troubleshooting 7-49
Half Self-Test Functional Check 7-49

Drum Rotation Functional Check 7-50
High Voltage Power Supply Assembly 7-51
Interface Troubleshooting 7-52
Communications Check 7-52
Test Message 7-52
AUTOEXEC.BAT Standard Configurations 7-53
Parallel DOS Commands 7-53
Serial MS-DOS Commands 7-53
Communications Checks 7-54
MIO Troubleshooting 7-56
Troubleshooting Hints 7-56
Explanation of Self Test Printout 7-57
Troubleshooting Aids 7-59
Component Locations 7-59
Repetitive Defect Template 7-67
Voltage Test Points 7-69
Measuring the DC Voltage Levels 7-69

8 Parts and Diagrams

How To Use the Parts Lists 8-1
Parts Lists and Illustrations 8-2
Accessory Parts 8-33
SIMM Memory 8-38
Miscellaneous Parts and Accessories 8-39
Parts List 8-40

A Duplexer

Functional Overview A-2
Duplex Printing A-3
Switchback Assembly A-3
Holding Tray A-3
Electrical Overview A-5
Installing the Optional Duplexer A-6
Removal and Replacement A-8
Required Tools A-8
Removing the Covers A-9
Removing the Switchback Covers A-9
Removing the Side Cover on Power Side A-10
Removing the Side Cover on Gear Side A-11
Removing the Back Cover A-13
Removing the Front Cover A-13
Removing Internal Duplexer Components A-14
Removing the Fan/Motor/Solenoid/Sensor A-14
Removing the Switchback Paper Guide A-15

Removing the Paper Guide Assembly A-16
Removing the Paper Roller A-17
Removing the Control PCA A-20
Removing the Power PCA A-22
Removing the Holding Tray Center Paper Guide . . . A-23
Removing the Holding Tray Belt A-24
Removing the Holding Tray Paper Sensor A-26
Removing the Switchback Assembly A-27
Parts and Diagrams for the Duplexer A-28

B LaserJet 5/5M/5N Printer

Product Information B-2
Product Family Information B-3
Identification B-5
Specifications B-6
HP LaserJet 5 / 5M / 5N B-6
Related Documentation B-8
Laser Statement (Sweden/Finland) B-9
Control Panel Layout B-10
Control Panel Keys B-10
Control Panel Menus B-13
To change a control panel setting: B-13
Printing Menu B-15
PCL Fonts Menu B-17
PostScript Menu B-18
Job Menu B-18
Configuration Menu B-19
Memory Configuration Menu B-21
Parallel Menu B-22
Serial Menu B-22
Resets Menu B-23
Test Menu B-24
Service Mode B-25
Setting the Page Count B-26
Setting the Cold Reset Default B-27
Skip Demo B-28
Big Data B-28
Diagnostics B-28
Programming a Flash SIMM B-29
Changing the Control Panel Display Language . . . B-30
NVRAM Init B-31
Understanding the PCL Self Test Printout B-32
Infrared Communication B-34
System Requirements B-35

To Print Using the Infrared Port B-36
Troubleshooting IR Printing Problems B-38
Infrared Port Not Responding B-41

1

Product Information

Table 1-1 Printer Features

Features	HP LJ 4	HP LJ 4M	HP LJ 4 Plus	HP LJ4M Plus
Model	C2001A	C2021A	C2037A	C2039A
Printer Speed	8 ppm	8 ppm	12 ppm	12 ppm
Resolution	300/600 dpi	300/600 dpi	300/600 dpi	300/600 dpi
Expandable I/O Buffer	No	No	Yes	Yes
Resource Savings	No	No	Yes	Yes
MEt	No	No	Yes	Yes
REt	Yes	Yes	Yes	Yes
Languages	Enhanced PCL5	Enhanced PCL5, Postscript Level 2	Enhanced PCL5	Enhanced PCL5, Postscript Level 2
PostScript Upgradeable	C2080A*	N/A	C3129A*	N/A
Resident Memory	2 MByte	6 MByte	2 MByte	6 MByte
Printer Max. Memory Capacity	34 MByte	26 MByte	66 MByte	50 MByte
Available Memory Slots	Four	Two**	Four	Two **
PC Tray Capacity	250 Sheets	250 Sheets	250 Sheets	250 Sheets
MP Tray Capacity	100 Sheets	100 Sheets	100 Sheets	100 Sheets
Output Capacity	250 Sheets	250 Sheets	250 Sheets	250 Sheets
500 Sheet Optional Feeder	C2083A	C2083A	C2083D	C2083D
Duplex Option	N/A	N/A	C3157A	C3157A
Envelope Feeder	C2082A	C2082A	C2082B	C2082B
Typefaces	45 PCL	45 PCL 35 Postscript	45 PCL	45 PCL 35 Postscript
Interfaces	Serial (25 pin) Parallel	Serial (25 pin) Parallel, Local Talk	Serial (9 pin) Parallel	Serial (9 pin) Parallel Local Talk
MIO Slots	Yes	Yes (J2341A)	Yes	Yes (J2552A)
EconoMode	No	No	Yes	Yes
Cartridge Slot	Yes	Yes	Yes	Yes
Power Save	No	No	Yes	Yes
Monthly Usage (pages)	Up to 20,000	Up to 20,000	Up to 20,000	Up to 20,000

*The PostScript upgrade requires an additional 4 MB SIMM.
**PostScript & Memory SIMM already occupy 2 slots.

Product Family Information

The model HP C2021A is identical to the model HP C2001A from a hardware standpoint, as is the model HP C2039A to the model HP C2037A. The models HP C2021A and C2039A printers include the following features:

- PostScript Level 2 SIMM
- AppleTalk MIO Card
- 4 MBytes of RAM

In every instance the repair procedures for all products are similar.

Some LaserJet 4 accessories are compatible with the LaserJet 4 Plus and some are not. The compatibility chart below may be used when there is a question of accessory compatibility.

Table 1-2 Product Family Compatibility Matrix

Accessory	Description	Does it work in the HPLaserJet 4?	Does it work in the HPLaserJet 4 Plus?
C2082A	Envelope Feeder	Yes	No
C2082B	Envelope Feeder	Yes	Yes
C2083A	Optional 500 Sheet Feeder Assembly	Yes	No
C2083D	Optional 500 Sheet Feeder Assembly	Yes	Yes
C2085A	250 Sheet Universal PC tray	Yes	No
C2085D	250 Sheet Universal PC tray	No	Yes
C3129A	PostScript SIMM	No	Yes
C2080A	PostScript SIMM	Yes	No
C2063A	Memory (1 MByte)	Yes	Yes
C2064A	Memory (2 MByte)	Yes	Yes
C2065A	Memory (4 MByte)	Yes	Yes
C2066A	Memory (8 MByte)	Yes	Yes
C3130A *	Memory (1 MByte)	No	Yes
C3131A *	Memory (2 MByte)	No	Yes
C3132A*	Memory (4 MByte)	No	Yes
C3133A*	Memory (8 MByte)	No	Yes
C3146A *	Memory (16 MByte)	No	Yes
C3157A	Duplex Assembly	No	Yes
92298A	Toner Cartridge	Yes	Yes

*If HP LaserJet 4 Plus Optional Memory (C3130A, C3131A, C3132A, C3133 or C3146A) is installed in the HP LaserJet 4, the printer will display a “53.1X.08 ERROR” (X indicates the position of the SIMMs slot).

Identification

The model number is on a label placed on the outside, rear cover of the printer. The model number (C2001A, C2021A, C2037A or C2039A) is found at the top of the label. The model number is the base number for all printers.

The serial number contains information about the printer Country of Origin. The serial number Alpha section refers to the Country of Origin, the Revision Level and the Production Code. The Numeric section refers to the production number of the printer. See the following for information about the production codes.

A typical serial number would consist of: **CC R P XXXXXX**

Code	*Meaning*
CC	Country of Origin
R	Revision Number - Alphanumeric, no vowels
P	Production Code - Alphanumeric, no vowels
XXX-XXXX	Numeric serial number - Numeric, no alphas

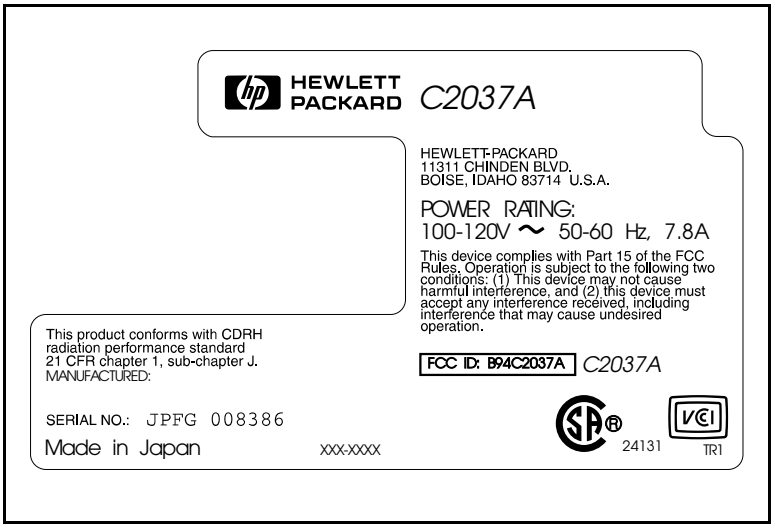

Figure 1-1 Printer Identification Label for the HP LaserJet 4 Plus/4M Plus

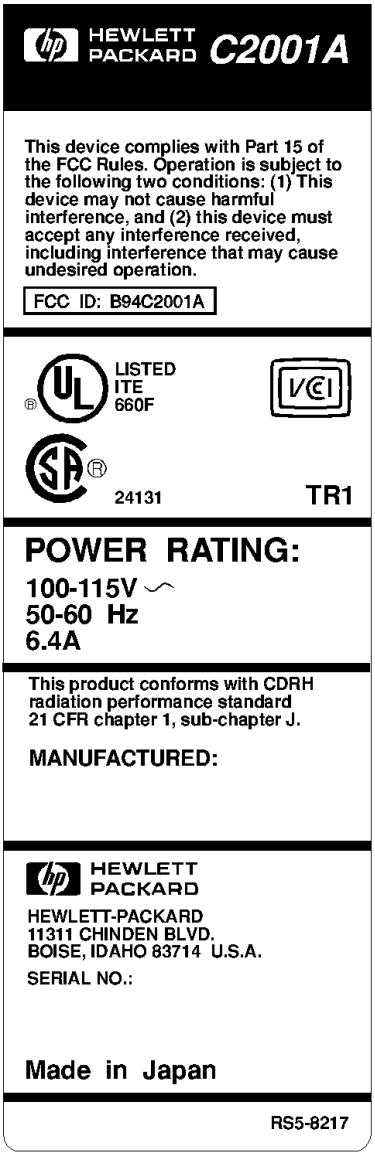

Figure 1-2 **Printer Identification Label for the HP LaserJet 4/4M**

Specifications

HP LaserJet 4 and 4 Plus

Table 1-3 Printer Dimensions

Dimension	HP LaserJet 4/4M (C2001A/C2021A)	HP LaserJet 4 Plus HP LaserJet 4M Plus (C2037A/C2039A)
Width	16.4 in (416 mm)	16.4 in (416 mm)
Depth	15.9 in (403 mm)	15.9 in (403 mm)
Height	11.7 in (297 mm)	11.7 in (297 mm)
Weight (with toner cartridge)	37 lbs. (18.3 kg)	37 lbs. (18.3 kg)

Table 1-4 Power Specifications

Volts	Freq	Watts (typical)	
		4/4M	4 Plus/4M Plus
100 Vac ± 10% 120 Vac ± 10%	50/60 Hz ± 2 Hz 50/60 Hz ± 2 Hz	printing = 195 standby = 55	printing = 300 standby = 80 PowerSave=25
220 Vac ± 10% 240Vac ± 10%	50/60 Hz ± 2 Hz 50/60 Hz ± 2 Hz	printing = 195 standby = 55	printing =300 standby = 80 PowerSave=25

Table 1-6 Electrical Specifications

Status	100/115 V		220/240 V	
	4/4M	4 Plus/4M Plus	4/4M	4 Plus/4M Plus
Product Rating	6.4 amps	7.8 amps	3.1 amps	4.0 amps
Peak Inrush Current	22 amps	22 amps	22 amps	22 amps
25% Decay Time	13 msec	18 msec	11 msec	11 msec
Peak Fuser Current	38 amps	51 amps	17 amps	22 amps
Return-to Average Time	200 msec	200 msec	200 msec	200 msec

Table 1-5 Environmental Specifications

Operating Environment	**Temperature:** 10° C to 32.5° C (50° F to 90.5° F) **Humidity:** 20-80% (no condensation)
Storage Environment (not including toner cartridge)	**Temperature:** -20° to 60° C (-4° to 140°F) **Humidity**: 15-90% (no condensation)

Related Documentation

The following manuals can be ordered from Hewlett-Packard's Support Materials Organization (SMO). The phone number for SMO is (800) 227-8164.

Table 1-7 Printer Documentation

HP LaserJet 4 Documents—Description	Part Number
Your Guide to Setting Up the HP LaserJet 4 Printer	C2001-90901
HP LaserJet 4 User's Manual	C2001-90912
HP PCL5 Printer Language Technical Reference Package	5010-3994
HPJet Direct Network Installation Guide	J2552-90011
HPJet Direct Network Software Configuration Guide	J2552-90001
HP LaserJet 4 Plus Documents—Description	**Part Number**
HP LaserJet 4 Plus and 4M Plus User's Manual	C2037-90901
HP LaserJet 4 Plus Getting Started Guide	C2037-90917
HP LaserJet 4M Plus Getting Started Guide	C2039-90901

Safety Information

Product and Laser Safety

HP printers are UL 1950 listed, CSA 22.2 950 certified, and manufactured in accordance with DIN IEC 950. The printers are certified as “Class 1” laser products under the U.S. Department of Health and Human Services (DHHS) Radiation Performance Standard, according to the *Radiation Control for Health and Safety Act* of 1968. The printers do not produce hazardous laser radiation.

Since radiation emitted inside the printer is completely confined within protective housings and external covers, the laser beam cannot escape during any phase of normal user operation.

The Center for Devices and Radiological Health (CDRH) of the U.S. Food and Drug Administration implemented regulations for laser products on August 2, 1976. These regulations apply to laser products manufactured from August 1, 1976. Compliance is mandatory for products marketed in the United States.

Note In accordance with West German standard VDE0836 (VDE-Bestimmung fur die Elektrische Sicherheit von Lasergeraten und Anlagen), two servicemen are required to service each unit.

Since the laser beam is invisible, the label on the following page is attached to the Laser Scanner Cover inside the printer where there is danger of exposure to laser radiation.

Caution Never service or operate the printer with the protective cover removed from the laser scanner assembly. The reflected beam, although invisible, can damage your eyes.

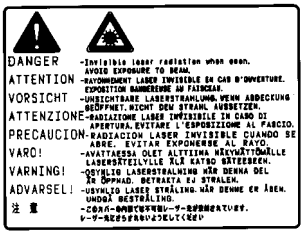

FCC RFI Statement

This equipment has been tested and found to comply with the limits for a Class B digital device, pursuant to Part 15 of the FCC Rules. These limits are designed to provide reasonable protection against harmful interference when the equipment is operated in a commercial environment. This equipment generates, uses, and can radiate radio frequency energy and, if not installed and used in accordance with the instruction manual, may cause harmful interference to radio communications. However, there is no guarantee that interference will not occur in a particular installation. If this equipment does cause harmful interference to radio or television reception, which can be determined by turning the equipment off and on, the user is encouraged to try to correct the interference by one or more of the following measures:

- Reorient or relocate the receiving attenna.
- Increase the separation between the equipment and the receiver.
- Connect the equipment into an outlet on a circuit different from that to which the receiver is connected.
- Consult the dealer or an experienced radio/TV technician for help.

Any changes or modifications not expressly approved by Hewlett-Packard could void the user's authority to operate this equipment.

Note Use of a shielded interface cable is required to comply with the Class B limits of Part 15 of the FCC rules.

This product also meets the FCC Class A emission standards.

Laser Statement (Sweden/Finland)

LASERTURVALLISUUS

LUOKAN 1 LASERLAITE
KLASS 1 LASER APPARAT

HP LaserJet(s) 4/4M, 4 Plus/4M Plus laserkirjoitin on käyttäjän kannalta turvallinen luokan 1 laserlaite. Normaalissa käytössä kirjoittimen suojakotelointi estää lasersäteen pääsyn laitteen ulkopuolelle.

Kirjoittimen on hyväksynyt Suomessa laserturvallisuuden osalta Sähkötarkastuskeskus. Laitteen turvallisuusluokka on määritetty valtioneuvoston päätöksen N:o 472/1985 ja standardin EN 60825 (1991) mukaisesti.

VAROITUS ! Laitteen käyttäminen muulla kuin käyttöohjeessa mainitulla tavalla saattaa altistaa käyttäjän turvallisuusluokan 1 ylittävälle näkymättömälle lasersäteilylle.

VARNING ! Om apparaten används på annat sätt än i bruksanvisning specificerats, kan användaren utsättas för osynlig laserstrålning, som överskrider gränsen för laserklass 1.

HUOLTO HP LaserJet (s) 4/4M, 4 Plus/4M Plus-kirjoittimen sisällä ei ole käyttäjän huollettavissa olevia kohteita. Laitteen saa avata ja huoltaa ainoastaan sen huoltamiseen koulutettu henkilö. Tällaiseksi huoltotoimenpiteeksi ei katsota väriainekasetin vaihtamista, paperiradan puhdistusta tai muita käyttäjän käsikirjassa lueteltuja, käyttäjän tehtäväksi tarkoitettuja ylläpitotoimia, jotka voidaan suorittaa ilman erikoistyökaluja.

VARO !Mikäli kirjoittimen suojakotelo avataan, olet alttiina näkymättömälle lasersäteilylle laitteen ollessa toiminnassa. Älä katso säteeseen.

VARNING !Om laserprinterns skyddshölje öppnas då apparaten är i funktion, utsättas användaren för osynlig laserstrålning. Betrakta ej strålen.

Tiedot laitteessa käytettävän laserdiodin säteilyominaisuuksista:

Aallonpituus 770-795 nm
Teho 5 mW
Luokan 3B laser

Toner Safety

Note Toner may stain clothing. Skin and clothing are best cleaned by removing as much toner as possible with a dry tissue, then washing with cold water. Hot water causes toner to melt and permanently fuse into clothing.

A Material Safety Data Sheet (MSDS) for the toner cartridge used in the HP printers, is available through Hewlett-Packard by either mail or fax.

Mail. To obtain a MSDS for the 92298A LaserJet Toner Imaging System through the mail, call the Customer Information Center (CIC) at 1-800-752-0900 between 6 A.M. and 5 P.M. Pacific Standard Time.
Fax. To obtain a MSDS for the 92298A LaserJet Toner Imaging System by fax, call the HP FIRST number at (800) 333-1917 (U.S. and Canada) and enter document number 1512.

Note To get documents from HP FIRST by fax, you must use a Group 3 (touchtone) fax machine.

Ozone Statement

These printers do not use high voltage corona wires in the electro-photographic process, and therefore generate no measurable ozone gas (O_3). They use a charging roller in the toner cartridge and a charging transfer roller in the printer.

Doing Business with HP

Technical Assistance

HP ASAP 1-800-333-1917 (U.S.)

HP ASAP (Automated Support Access Program) provides free technical support information 24 hours a day, 7 days a week. The ASAP system includes HP FIRST and HP AUDIO-TIPS, both explained below. The ASAP service requires a touch-tone phone.

HP FIRST

HP FIRST (Fax Information Retrieval Support Technology) is a phone-in fax service providing technical information for HP LaserJet users as well as service personnel. Receiving a fax requires a group 3 facsimile machine or fax card. Service-related information includes:

- Service notes (HP Authorized Dealers) (password = 737842).
- Application notes.
- Product Data Sheets.
- Material Safety Data Sheets (MSDS).
- Typeface and accessory information.
- Printer support software information.
- Toner information.
- Driver request form and Software Matrix.

HP FIRST, U.S.

Call the HP ASAP system (1-800-333-1917) and follow the voice prompts to enter HP FIRST.

HP FIRST, Europe

Call HP FIRST at one of the following numbers:

U.K., 0-800-96-02-71
Belgium (Dutch), 0800-1-1906
Switzerland (German), 155-1527
Netherlands, 06-02-22-420
Germany, 0130-8100-61
Austria, 0660-8128
For English service outside the above countries, (31) 20-681-5792

HP AUDIO-TIPS

HP AUDIO-TIPS, available within HP ASAP, is an interactive voice response system providing pre-recorded answers to the questions most frequently asked by HP LaserJet printer users. Helpful “System Maps” to the HP AUDIO-TIPS recordings are available by fax through HP FIRST.

HP CompuServe Forum

CompuServe members can download a variety of support materials including product data sheets, software application notes, and printer drivers for many popular software applications. Members may also post and reply to questions in an interactive format. To access the HP Forum, type GO HPPER at any prompt. For more information, or to join CompuServe, call 1-800-524-3388.

Customer Information Centers

For further technical assistance, service-authorized HP and dealer service personnel can contact the nearest Hewlett-Packard Customer Information Center, 1-800-752-0900 in North America.

Customer Support Center (Assist Line)

The HP Customer Support Center, (208-323-2551) is available to answer technical questions regarding setup, configuration, installation and operation of HP printers in the PC and Macintosh environments. The CSC Assist Line is available weekdays from 7 am to 6 pm Mountain Time (Wednesdays until 4 pm).

Questions relating to operating systems such as MS-DOS and UNIX, your network configuration, or network operating system cannot be answered by the Center and should be referred to your authorized reseller.

Printer Drivers

To order additional drivers for your software applications, call the HP Driver Distribution Center at 1-970-339-7009.

European Customer Support Center

The HP European Customer Support Center, located in Amsterdam, Holland, is open from 8:30 am to 6:00 pm central European time (Wednesdays until 4:00 pm). Multilingual customer support representatives can answer technical questions similar to the U.S. CSC, described on the previous page. This service is available at no charge for a period equivalent to the original HP hardware warranty period.

Each time you call the HP European Customer Support Center, you will be required to provide the printer's serial number and original date of purchase.

To receive a fax listing the supported languages on a country's phone number, call HP FIRST (refer to "HP FIRST," earlier in this section). You can also call the nearest HP Sales and Service office to obtain the telephone number for the Center. The Center features automated call-routing technology, so you will receive faster service if calling from a touchtone phone or tone dialer.

Other Areas

Outside of North America and Europe, contact your local HP sales office for assistance in obtaining technical support.

2

Site Planning and Requirements

Site Requirements

The environmental specifications, listed in the *Specifications* section of Chapter 1, must be maintained to ensure the proper operation of this printer. Consider the following points before installing the printer:

- Install the printer in a well-ventilated area.
- Install the printer on a sturdy, level surface.
- Install the printer where the temperature and humidity do not change abruptly. Do not position the printer near water sources, humidifiers, air conditioners, refrigerators, or other major appliances.
- Do not expose the printer to direct sunlight, dust, open flames, or ammonia fumes. If the printer is placed near a window, make sure the window has a curtain or blind to block direct sunlight.
- Install the printer away from walls. There must be enough space around the printer for proper access and operation (see Figure 2-1).

Printer Space Requirements

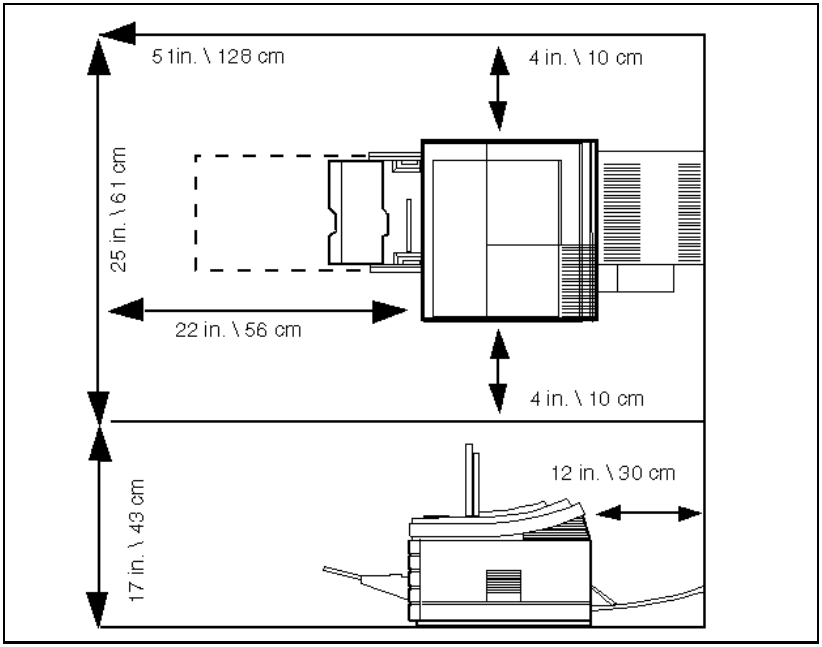

Figure 2-1 Space Requirements

Print Media Specifications

The complete media specifications are listed in the *HP LaserJet Family Paper Specifications Guide* (part no. 5961-0920), that came with this manual.

Each tray has its own set of paper specifications. *Do not* use paper heavier than 36 pound from the MP tray (Tray 1), 28 pound from the PC tray (Tray 2), or 24 pound from the LC Tray (Tray 3).

Table 2-1 Media Specifications for MP Tray (Tray 1)

Media	Size	Capacity	Weight/Thickness Range
Paper	Letter, Legal, Executive, A4	100 sheets at 20# (75 g/m^2)	16# to 36# (60 to 135 g/m^2)
Envelopes	COM10, MONARCH, ISO DL, C5, B5	10 of any kind	16# to 24# (60 to 90 g/m^2)
Transparencies	Letter, A4	Approx. 75	0.0039 in. to 0.0045 in. thickness (0.099 to 0.114 mm)
Labels	Letter, A4	Approx. 75	0.005 in. to 0.007 in. thickness (0.127 to 0.178 mm)
Minimum Size: 3.5 in. x 6.5 in. (90 mm x 160 mm)			
Maximum Size: 8.5 in. x 14 in. (216 mm x 356 mm)			

Table 2-2 Media Specifications for PC Tray (Tray 2)

Media	Size	Capacity	Weight/Thickness Range
Paper	Letter, A4	250 sheets at 20# (75 g/m^2)	16# to 28# (60 to 105 g/m^2)

Table 2-3 Media Specifications for Optional LC Tray (Tray 3)

Media	Size	Capacity	Weight/Thickness Range
Paper	Letter, A4, Executive	500 sheets at 20# (75 g/m^2)	16# to 24# (60 to 90 g/m^2)

Note Printing heavy paper stock (greater than 24 lb. (90 g/m^2) from the 500-sheet Lower Cassette specifically is not supported.

Table 2-4 Media Specifications for Duplex Assembly (HP LaserJet 4 Plus, 4M Plus, 5, 5M, and 5N printers)

Media	Size	Weight/Thickness Range
Paper	Letter, Legal, A4	16# to 24# (60 to 90 g/m^2)

Adhesive Labels

Note Printing labels using the Duplex Assembly , the 500-sheet Lower Cassette (Tray 3) or the PC tray (Tray 2) specifically is not supported. Always use the MP tray (Tray 1) to print labels.

Label Construction

When selecting labels, consider the quality of each component:

- **Adhesives:** The adhesive material should be stable at the 392° F (200° C) temperatures encountered in the printer's fusing process. None of the adhesive should be exposed between the labels.
- **Label arrangement:** If possible, use labels with no exposed areas between labels. If labels with exposed areas *are* used, they should be arranged on the carrier sheet (the backing) so that they cover the entire page *with the exposed areas of the carrier sheet running lengthwise down the sheet*. Using label stock with spaces between labels often results in labels peeling off during the printing cycle, causing serious jamming problems.
- **Label curl:** Labels must lie flat with no more than 0.5in(13mm) of curl in any direction.
- **Poorly manufactured labels:** Do not use labels with wrinkles, bubbles, or other indications of delamination.

Overhead Transparencies

Note Printing overhead transparencies using the Duplex Assembly, the 500-sheet Lower Cassette (Tray 3) or PC tray (Tray 2) specifically is not supported.

Overhead transparencies used in HP LaserJet printers must be able to withstand the 392° F (200° C) temperature encountered in the printer's fusing process. See the *HP LaserJet Family Paper Specifications Guide* for more information.

Caution Use only overhead transparencies recommended for use in laser printers.

Envelopes

Many kinds of envelopes can be printed with your printer. Some envelope styles perform better than others because their construction is better suited to feeding through a laser printer.

Hewlett-Packard Company neither warrants nor recommends the use of a particular brand of envelope. Envelope properties are subject to change by envelope manufacturers, and Hewlett-Packard Company has no control over such changes.

Envelope Construction

The following table lists the kinds of envelopes you can print in the MP Tray (Tray 1).

Table 2-5 Specifications for Envelopes

Item	Specifications
Minimum envelope size	3.5 in x 7 in (86 mm x 178 mm)
Maximum envelope size	7.4 in x 10.5 in (188 mm x 267 mm)
Basis Weight	16 to 24 pound (60 to 90 g/m^2)
Quantity	Maximum 10 envelopes
Envelope Size	**Dimensions**
Commercial #10 (COM 10)	4.1 in x 9.5 in (105 mm x 241 mm)
#7 3/4 (Monarch)	3.8 in x 7.5 in (98 mm x 191 mm)
DL	109 mm x 218 mm (4.3 in x 8.6 in)
C5	163 mm x 231 mm (6.4 in x 9.1 in)
B5	178 mm x 251 mm (7.0 in x 9.9 in)

See the *HP LaserJet Family Paper Specifications Guide* for more information.

3

Configuration

Introduction

The Configuration of the printer consists of setting hard and soft user defaults, and setting up the host computer to communicate with the printer (System Configuration). For installation instructions refer to Installation in the *Getting Started Manual* that is shipped with the printer.

Hard defaults are the I/O Menu and Configuration Menu settings. These are set when the printer is installed and remain as configured. The soft defaults (Printing menu and PCL menu) change with the print job requirements. System Configuration includes installing printer drivers, MODE commands and updating the AUTOEXEC.BAT file.

The instructions in this chapter explain how to access the printer features through the control panel, and how to set up the printer in different configurations. This chapter explains how to check the configuration settings, and how to verify that a configuration is correctly selected.

Setup and configuration information for accessories is available in this chapter. This information is intended to augment and not replace the information provided with the accessories themselves. If possible, use the information provided with the accessories when installing the accessory products.

Use the information that comes with the printer drivers when installing the printer. *Many features of the printer are not available without the correct printer driver for the software application*.

Using The Control Panel

(See Appendix B for LaserJet 5 information.)

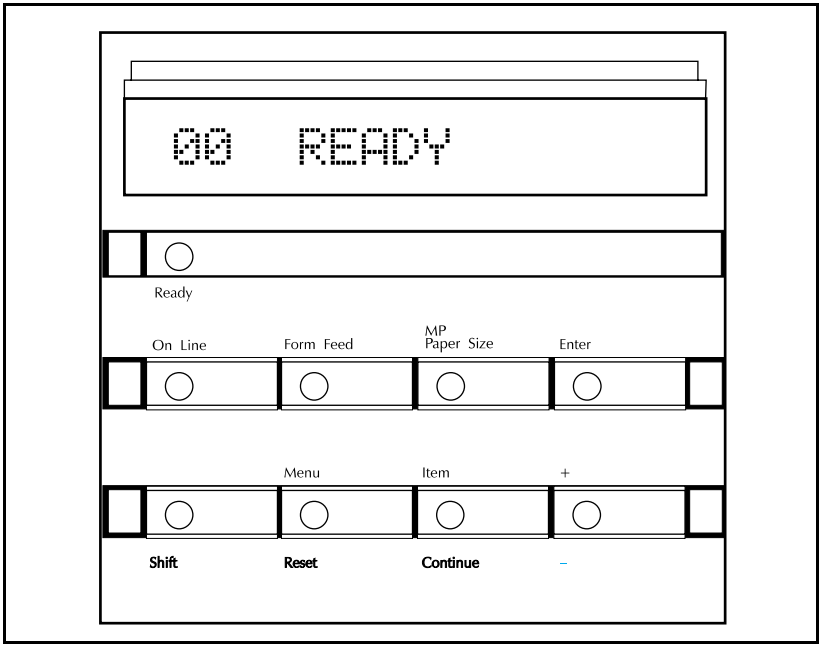

Figure 3-1 Control Panel Keys

The control panel (see Figure 3-1) consists of eight keys, three indicator lights, and a 16-character display panel. The three indicator lights are described in Table 3-1.

Control Panel Keys

There are two rows of control panel keys. The upper row keys have one function each. The lower row keys have a second level of functions which are accessed by holding down **Shift**. Note that the alternate functions **Reset**, **Continue**, and **-** are coded the same color as **Shift**. Table 3-2 details both plain key functions and shift-key combinations.

Table 3-1 Indicator Lights

Indicator	Mode	Description
Ready	**On:**	Ready to print.
	Flashing:	Processing a print job. Do not take off line or switch off.
	Off:	Not ready; see display for message.
On Line	**On:**	Ready to receive data.
	Flashing:	Going from on line to off line.
	Off:	Off line. Other keys can be accessed.
Form Feed	**On:**	Data still in printer buffer.
	Flashing:	Buffered data being printed.
	Off:	No buffered data in printer.

Table 3-2 Control Panel Key Functions

Key	Function
On Line	Switches the printer between ON LINE (communicating with the computer or other data source) and OFF LINE (not communicating). For the printer to receive data, both the On Line and Ready indicator lights must be on.
Form Feed	Prints any data remaining in printer's buffer. It cannot be used to send a blank sheet of paper through the printer.
MP Paper Size	Selects the physical paper size loaded in the MP tray *only* when it is operating as a PC tray.
Enter	Saves a selection in the printer's "permanent" memory. An asterisk (*) appears next to the item to indicate that it is now the default. The selection remains even if the printer is switched off or you perform a reset. If buffered data or temporary data (such as temporary downloaded typefaces) are present, Enter only marks the items with an asterisk (*) as the default. When you press On Line or Menu, the message 10 RESET TO SAVE appears. There are three choices: Reset — Clears page buffers RESET MENU — (See the following table.) Clears page buffers On Line — Places the printer on line without performing a reset.
Shift	Accesses the lower labels (Reset , Continue , and -) on the control panel. It works like the Shift key on your computer's keyboard.
Menu	Menu cycles through the menu selections, returning to 00 READY at the end of the cycle unless an error, warning, or configuration problem is encountered. If an option such as PostScript or a different I/O has been added, that menu appears in the menu sequence.
Continue	Continue (Shift + Item) allows the printer to resume printing after it has been placed off line due to an error condition or a device attendance request (such as 21 PRINT OVERRUN). The Continue key clears most error messages and places the printer back on line. It functions like the On Line key except:
	1. Continue does not override an error condition.
	2. Continue allows you to override the paper or envelope size selection regardless of what size media is in the MP tray.
	3. Continue allows you to override a request to manually feed paper or an envelope; it will select paper from the next available source instead.
+ or -	+ or - allows you to *step* (by momentarily pressing the key) or *scroll* (by holding down the key) through the item choices for a specific menu. Shift + (or -) allows you to cycle through the item choices in reverse order.

Reset Menu

Use Reset Menu function with caution. It can result in loss of buffered page data or printer configuration data. Reset Menu is activated by holding down both **Shift** and **Menu** *for up to 10 seconds* until RESET=MENU* appears. Use **+** or **-** to cycle through items and **Enter** to select the item. The reset is executed by pressing **On Line**.

Table 3-2 Reset Menu Functions

Reset (and Menu of Resets)	A reset (**Shift** + **Menu**) displays a 07 RESET, clears the printer's page buffer, removes all temporary typefaces and macros, and makes the current user-established defaults "permanent." They will be the default values until they are changed by the user.
	To access the Menu of Resets, hold down both **Shift** and **Menu** for about 10 seconds until RESET=MENU* appears in the display panel. Use **-** to cycle through the display choices, and **Enter** to select the option. Execute the reset by pressing **On Line**. The printer responds with a reset message for the choice selected.
The three RESET= choices are:	MENU* clears the page buffer, removes all temporary personality data such as downloaded typefaces, and resets all printing environment parameters (such as number of copies, paper size, etc.), and sets user-selected defaults (such as MP tray default configuration) to their factory defaults. Certain items, such as the display language or I/O configuration, are not reset. RESET=MENU clears only the active I/O input buffer.
	ACTIVE I/O clears the page buffer, removes all perishable personality data such as temporary typefaces, and clears the input and output buffers *for the active I/O only*.
	ALL I/O clears the page buffer, removes all perishable personality data such as temporary typefaces, and clears the input and output buffers *for all I/Os*.

* indicates factory default.

Control Panel Menus

Figure 3-2 shows the menus and menu items available with the basic printer configuration. Not all menu items are discussed in this section. Only those items of specific interest from a service standpoint, or items new to the printers are discussed in this section. If options such as PostScript or a different I/O are installed, new menu items automatically are added at the appropriate location. For example, a PostScript Menu appears following the PCL Menu.

Figure 3-2 Control Panel Map

PRINTING MENU	PCL MENU	PS MENU	JOB MENU	CONFIG MENU	MEM CONFIG MENU *	PARALLEL MENU	SERIAL MENU	TEST MENU
COPIES	FONT SOURCE	PRT PS ERRS	PAGE PROTECT	MP TRAY	I/O BUFFER	HIGH SPEED	SERIAL	SELF TEST
PAPER (ENVELOPE)	FONT NUMBER	JAM RECOVER	RESOLUTION	LOCK	I/O SIZE	ADV FUNCTIONS	PACING	CONT SELF TEST
ORIENTATION	PITCH or PT SIZE		PERSONALTY	CLR WARN	RESRCSAVE		BAUD RATE	PCL TYPEFACE LIST
FORM	SYM SET		PWR SAVER	AUTO CONT	PCL MEM		ROBUST XON	PCL DEMO PAGE
MANUAL FEED			I/O TIME OUT	DENSITY	PS MEM		DTR POLARITY	PS CONFIG PG
RET				TONER LOW				PS TYPEFACE LIST
ECONOMODE								PS DEMO PAGE
DUPLEX								
BIND								

You can change these menu items either from a software application or from the printer's control panel.

You can change these menu items only from the printer's control panel

LaserJet 4 and 4 Plus
LaserJet 4 Plus duplexer option
LaserJet 4 Plus only
LaserJet 4 only

Shaded items appear when printer options are installed.

* The Memory Configuration menu appears only when 6 MBytes of memory or more are installed.

Table 3-3 Printer Menu Items

Item	Options	Explanation
COPIES	1* to 999	Select any number from 1 to 999.
PAPER ENVELOPES	LETTER* (110V printers), LEGAL, A4* (220V printers) EXEC COM10* (110V printers), MONARCH, DL* (220V printers), C5, B5	Sets default image size, unless software setting overrides it.
ORIENTATION	P*, L	P means portrait (vertical) and L means landscape (horizontal) orientation.
FORM (5 to 128 lines)	60* (110V printers) 64* (220V printers)	Sets vertical spacing from 5 to 28 lines.
MANUAL FEED	OFF*, ON	Only for MP Tray.
RET	OFF, LIGHT, MEDIUM*, DARK	Refines print quality.
ECONOMODE (HP LJ4+only)	OFF*, ON	Reduces amount of toner used.
DUPLEX (HP LJ4+ with Duplex only)	OFF*, ON	Allows for printing on both sides of paper.
BIND (HP LJ4+with Duplex only)	LONG EDGE* SHORT EDGE	Determines orientation of page.

*indicates factory default.

Table 3-3 PCL Menu Items

Item	Options	Explanation
FONT SOURCE	I* C S Mn (1-4)	Internal fonts* Cartridge fonts Permanent soft fonts SIMM Module: n=slot number. Typefaces stored in one of the four ROM SIMM slots (M1=slot 1, for example).
FONT NUMBER	0* to 999	Number assigned to each typeface.
PITCH or PT. SIZE	Pitch: 10.00* Point: 12.00*	Depends on the FONT SOURCE and FONT NUMBER selected.
SYM SET	ROMAN-8 Many others	A unique grouping of all characters in a font.

*indicates factory default.

Table 3-4 Job Menu Items

Item	Options	Explanation
RESOLUTION	300 or 600*	Sets the resolution.
PERSONALTY	AUTO* PCL PS (Postscript)	Sets the printer language.
PWRSAVE (HP LJ4+ only)	OFF, 15 MIN, 30 MIN, 1 HR, 2 HRS, 3 HRS	Sets the amount of time the printer is idle before the fuser shuts down.
IO TIMEOUT	15* (5 to 300)	Time in seconds that the printer waits before ending a print job.
PAGE PROTECT (HP LJ4 only)	AUTO*, ON	Only seen with error 21 PRINT OVERRUN.

*indicates factory default.

Table 3-5 Configuration Menu Items

Item	Options	Explanation
MP TRAY	FIRST* CASS MANUAL	Paper is selected first. Operates as a PC tray. Operates as a manual feed tray.
LOCK	NONE* MP PC LC and combinations	No trays are locked out. The MP tray is locked out. The PC tray is locked out. The optional Lower Cassette is locked out.
CLR WARN	ON*, JOB	Indicates a transient condition.
AUTO CONT	OFF* ON	When an error is encountered, printer goes off line until SHIFT + CONTINUE are pressed. When an error is encountered, printer goes off line for 10 secs., then comes back on line.
DENSITY	1, 2, 3*, 4, 5	Determines relative darkness of print. Higher numbers yield darker print but shorter toner cartridge life. May take up to 20 pages for new setting to stabilize.
LOW TONER	CONT* STOP	Printer remains on line and continues to print after the 16 TONER LOW message is displayed. Printer goes off line after the 16 TONER LOW message is displayed.

*indicates factory default.

Table 3-6 Memory Configuration Items

Item	Options	Explanation
IO BUFFER	AUTO* OFF ON	Memory is automatically determined by the printer. No memory is set aside. Size can be manually adjusted
IO SIZE	10K and up	With IO BUFER ON, adjust size in increments of 10.
RESRCSAVE	 AUTO* OFF ON	Saves resources and extra memory and personality SIMM are installed in printer. Printer automatically determines the amount of memory to allocate to personality. No memory is allocated. Additional memory management selections appear.
PCL MEM PS MENU	0K and up	Increases memory for each installed personality.

*indicates factory default.

Table 3-7 Parallel Menu Items

Item	Options	Explanation
HIGH SPEED	YES* NO	Sets parallel interface to run at a higher data rate. Sets the parallel interface to run at a slower data rate.
ADV FNCTNS	ON* OFF	

*indicates factory default.

Table 3-8 Serial Menu Items

Item	Options	Explanation
SERIAL	RS-232* RS-422 (HP LJ 4 only)	Use the RS-422 when a longer cable is needed.
PACING	DTR/DSR* XON/XOFF	Use if the computer requires hardware flow control. Use if the computer requires software flow control.
BAUD RATE	9600* 300 to 57600	Tells how fast information will be transferred from the computer to the printer.
ROBUST XON	ON* OFF	Appears when pacing is set to XON/XOFF. Printer sends XON when printer is put on line or when sufficient buffer space is available. Printer sends one XON when it can accept more data or when it is put on line.
DTR POLARITY	HI* LO	Pin 20 is high. Pin 20 is low.

*indicates factory default.

Table 3-9 Test Menu Items

Item	Explanation
SELF TEST	With SELF TEST displayed, press ENTER to run a self test.
CONT SELF TEST	Prints continuous self test pages until ON LINE or SHIFT + CONTINUE are pressed.
PCL TYPE LIST	Prints a list of typefaces and bitmapped fonts in your printer.
PCL DEMO PAGE	Prints a page that illustrates the printer features.

*indicates factory default.

Printer Features

Some of the important features of the HP LaserJet 4, 4 Plus, and LaserJet 5 printers are described below.

Page Protection (HP LaserJet 4 only)

Note The default is `PAGE PROTECT=OFF*.` Unless you frequently get `21 PRINT OVERRUN` messages, *you may not need to set a value for page protection.*

Page protection reserves additional memory for the page image process, allowing the printer to create an entire page image in memory before paper starts through the printer. The memory required for page protection is dependent upon the resolution selected: a 600-dpi page can take *4 times* as much memory as a 300-dpi page. If you use page protection, set it for the size you expect to use most often. *Be sure you have sufficient installed memory for the option you select.* Complex graphics and PostScript applications also require more memory than is included in the standard printer configuration.

Note Unlike earlier HP LaserJet printers, page protection and resolution can be set regardless of memory installed in the printer. Be aware that setting page protection `ON` will decrease the amount of memory available for other memory dependent features.

Resource Saving (HP LaserJet 4 Plus and 5 only)

Resource Saving gives the printer the ability to save certain entities such as permanent soft fonts, macros, symbol sets and user-defined graphics patterns when the printer changes personalities, resolutions or page protect modes. For example, if a user switches the LaserJet 4 printer from PCL mode to PostScript mode, all PCL soft fonts macros are lost. The HP LaserJet 4 Plus/4M Plus printer would not clear these entities from memory. When the user switches back to PCL from PostScript all of the PCL entities would still be resident in the HP LaserJet 4 Plus/4M Plus printer. Resource Saving can only be accessed when the printer has the PostScript language installed and a minimum memory configuration of 7 MB. If the printer has a duplexer option, the minimum amount of memory necessary to access Resource Saving is 13 MB.

The Resource Saving configuration is located in the Memory Configuration Menu. Resource Saving can be set for three modes, AUTO (default), ON, and OFF. Auto configuration sets the Resource Saving for PCL and Postscript to a minimum value (400 KBytes) for each personality. Setting Resource Saving to ON allows the user to determine how much printer memory will be used for Resource Saving for the PCL personality and the Postscript personality. The memory can be allocated in 100 KBytes increments. For example, if the user sets the Resource Saving memory size to 200 KBytes, a total of 400 KBytes of memory will be assigned to Resource Saving. 200 KBytes of memory will be used for Postscript Resource Saving and 200 KBytes of memory will be used for PCL Resource Saving. Turning Resource Saving OFF disables the Resource Saving function and no memory is allocated to Resource Saving.

I/O Buffering (HP LaserJet 4 Plus and 5 only)

I/O buffering allows the user to allocate printer memory to hold the job while it prints, freeing up the host system sooner, like a print spooler. The standard printer has approximately 10 KBytes of memory allocated to I/O buffering and an additional 100 KBytes of memory is assigned to I/O buffering for each 1 MByte of memory added to the printer.

If the printer has a minimum of 6 MBytes of memory installed (12 MBytes of memory for a printer with a duplex option), the I/O buffer size can also be adjusted from the control panel. Three settings exist for the I/O buffer; AUTO (default), ON, and OFF. AUTO sets the printer's I/O buffer to a minimum value that is determined by the total amount of memory that is resident in the printer. Setting I/O buffering to ON allows the user to set the I/O buffer size from the front panel. Setting the I/O buffering to OFF disables I/O buffering .

Note When you change the I/O buffer setting all downloaded resources are deleted.

EconoMode (HP LaserJet 4 Plus and 5 only)

The EconoMode setting uses approximately 50% less toner than standard mode printing by reducing dot density. EconoMode, which can also be thought of as “draft mode,” is user selectable via a front panel key, a Printer Job Language (PJL) sequence using HP Explorer’s Remote Control Panel or through application software. The default setting is OFF.

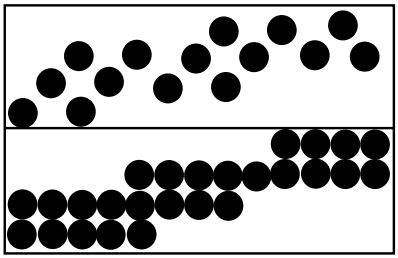

EconoMode, Medium Density

Normal Mode, Medium Density

Note EconoMode does not affect print speed or memory usage.

Resolution Enhancement (REt)

The printer Formatter PCA contains circuitry for Resolution Enhancement technology (REt), which modifies the standard video dot data on its way to the DC Controller to produce “smoothed” black-to-white boundaries. REt is user-adjustable from the front control panel, HP Explorer’s Remote Control Panel (Print Quality Category) or from some software applications. Available settings are Light, Medium, Dark or Off. The default setting is Medium.

Note REt settings sent from software or printer drivers override any control panel settings.

Memory Enhancement technology (MEt) (HP LaserJet 4 Plus and 5 only)

HP Memory Enhancement technology (MEt) effectively doubles the printer's standard memory through a variety of font and data compression methods. MEt also automatically compresses fonts for desktop publishing applications.

When printing graphics, MEt analyzes each page as it is being printed and automatically applies a variety of methods to print the complete page at the correct resolution. Two of these methods, Image Adapt and Page Protect, are user-selectable through HP Explorer's Remote Control Panel (Printer Memory Category).

Note MEt is only available in PCL mode; it is not functional when printing in PostScript mode.

Density

Print density is a measure of the darkness of print on the page. The factory default setting is 3, but you can experiment with different settings to find the best setting for your job. The lower numbers lighten the print, the higher numbers darken the print. (1 = low, 5 = high).

Print density can be affected by resolution enhancement, which can be set for dark, medium, or light values.

Note When you set the density to a higher number, toner is used at a faster rate, reducing toner cartridge life.

To adjust print density:

1. Press **On Line** to take the printer off line.
2. Press **Menu** until `CONFIG MENU` appears in the display.
3. Press **Item** until `DENSITY` appears in the display.
4. Press **+** or **-** to select the desired setting.
5. Press **Enter** to save the selection.
6. An asterisk (`*`) appears to indicate that your selection was saved.
7. Press **On Line** to return the printer to active status.
8. Print approximately 20 pages to allow the new density setting to stabilize.

Network Security

The HP LaserJet 4 Plus and 5 printers allow the System Administrator to lock out other user's ability to change most printer control panel settings. This is done by setting a password and turning LOCK on. The message MENU LOCKED will appear when a user tries to change the printer control panel settings.

Note If you forget your password, you can perform a "Cold Reset" by holding down the On Line key (Go on LJ 5) while turning the printer on.

There are four ways to implement printer security:

1. HP Explorer software's Remote Control Panel for DOS users, *if you are directly connected to the printer through its parallel port*.
2. HP LaserJet Utility for Macintosh users.
3. JetAdmin for Novell networks.
4. PJL escape sequence sent from any ASCII editor.

Remote Control Panel (DOS)

1. Select OPTIONS from the Remote Control Panel screen.
2. Select SECURITY from the OPTIONS menu.
3. Select **Use Password** from the **Printer Passwords** box.
4. Type in the password and confirm it in the **New Password** box. Numeric password values can be set from 0 to 65535. (If you already have a password, go the the next step; you will be prompted for your password.)
5. To lock the printer's control panel, select ON in the Control Panel Lock box.

HP LaserJet Utility (Macintosh)

1. Select the **HP LaserJet Utility** icon in the HP LaserJet folder on your hard drive.
2. If necessary, double click on the **Select Printer** button to select the the appropriate printer.
3. Under the Extras menu, select **Control Panel Lock**.
4. In the **Control Panel Lock: HP LaserJet 4M Plus or 5M** screen, click on the **On (Locked)** box, then click the **OK** button. You will be prompted to enter a password if the password has been set. If a password has not been set, go to the next step.

5 Under the Extras menu, select **Set Printer Password**. On the Printer Security screen, enter the new password (numeric values can be set from 0 to 65535), and click on the **OK** button.

HP JetAdmin Utility (Novell Networks)

1 Run JETADMIN.
2 Select the printer you want to configure. It is listed under its "JetDirect Interface Name" which appears on the self test page/configuration plot.
3 Select **Configuration...**. The *Printer I/O Configuration* screen appears.
4 Select **Advance...**. The *Advance Settings* screen appears.
5 Select **Lock Printer Control Panel...**.
6 Click on **Select...** (the *Advanced: Printer Security* screen appears), then click on the **ON** button.
7 Click the **OK** button.

ASCII PJL Escape Sequence

Password: send this sequence to the printer from any ASCII editor:

$^{E}_{C}$ %-12345X@PJL JOB
@PJL DEFAULT PASSWORD=[*numeric password (0 to 65535)*]
@PJL EOJ
$^{E}_{C}$ %-12345X

CPLOCK: to turn on or off, assuming that a password has **NOT** been set, send the following ASCII sequence to the printer:

$^{E}_{C}$ %-12345X@PJL JOB
@PJL DEFAULT CPLOCK=ON [*OFF*]
@PJL EOJ
$^{E}_{C}$ %-12345X

If a password **HAS** been set, send the following ASCII sequence to the printer to turn CPLOCK on or off.:

$^{E}_{C}$ %-12345X@PJL JOB PASSWORD=(numeric password)
@PJL DEFAULT CPLOCK=ON(OFF)
@PJL EOJ
$^{E}_{C}$ %-12345X

Service Mode

(Refer to Appendix B for LaserJet 5 information.)

The Service Mode should be used only by authorized service personnel. The following can be executed while in the Service Mode:

- Print a Service Mode Self Test.
- Verify the Page Count, (the page count also is displayed on the standard self test).
- Set the Page Count.
- Set the Cold Reset Default (This sets the factory default paper size. Use when replacing non-U.S. Formatters).
- Set the Diagnostic Functions *ON* or *OFF* (for software developers use only).
- Demo Page=On/Off. Removes the Demo Page option from the self test menu.
- BIG Data=On/Off (HP LaserJet 4 Plus only). Setting BIG Data to ON increases the size of the printer's status Readback Buffer.

The following procedure is used to initiate the Service Mode.

1. Hold down the **ON LINE**, **FORM FEED**, and **ENTER** keys while powering ON the printer, until the ON LINE and FORM FEED Indicators are both illuminated and **the Display Window is blank**. (If the Display Window reads `05 SELF TEST` at this point, the keys were released too soon. Repeat this step until successful.)
2. Press the **FORM FEED** key, then the **ENTER** key. The message `SERVICE MODE` is displayed briefly, then the printer automatically begins a `05 SELF TEST`.

After several seconds, the **ON LINE** and **FORM FEED** lights turn OFF. (The printer may display `02 WARMING UP` if it has not warmed up completely.)

After the printer has warmed up and passed the self test, `SERVICE MODE` is displayed.

To exit the Service Mode press the **ON LINE** key.

Setting the Page Count

The page count is stored in the printer's Non-Volatile Memory (NVRAM). If it is necessary to replace the Formatter PCA, the page count should be reset to the printer's original page count to reflect the age of the print engine. Use the following procedure to set the page count:

1. Enter the Service Mode as described previously.
2. When SERVICE MODE is displayed, press the MENU key to access the Service Menu. Press the ITEM key to step through the menu.
3. PAGES=XXXXXX is displayed. XXXXXX represents the page count currently stored in the printer's NVRAM. The underlined character denotes the cursor position.
4. Press the ENTER key to scroll the cursor to underline the desired digit.
5. Press the +/- key to select the correct value.
6. Press ENTER to store the new value in NVRAM.
7. Set each digit in the same manner. When the last digit's value has been entered, press ON LINE to return to SERVICE MODE.
8. Click the ON LINE key one more time to exit Service Mode.

Setting the Cold Reset Default

The default paper size outside of the U.S. is typically A4. Therefore, when replacing Formatters where the desired default is A4, the Customization Variable must be set to A4. This prevents the Cold Reset procedure from resetting the paper size to Letter. To set the Customization Variable:

1 Enter the Service Mode as described previously.
2 Press the **Menu** key to display `SERVICE MENU`.
3 Press the **Item** key to display `CR PAPER=LETTER`
4 Press the **+/-** key to toggle between Letter and A4 paper.
5 Press the **Enter** key to save your selection.
6 Press **On Line** to exit the Service Mode.

Cold Reset

The Cold Reset feature of the printers allows the printer to be returned instantly to the factory default configuration settings. This feature is valuable because the the Dynamic I/O and PJL features of the printer enable any user connected to any I/O to access and change the default configuration as applications require. When setting up the printer in a new location, or when troubleshooting printer problems, always perform the Cold Reset before entering the selected user defaults. **A Cold Reset can not reset the page count, cold reset tray size, or display language settings.** If the Control Panel is locked, a Cold Reset will disable the lock and return the printer to the factory defaults. Inform the system administrator of all Cold Resets.

A Cold Reset is performed as follows:

1. Turn OFF the printer.
2. Hold the **On-Line** (or **Go** for the LJ5) key down while powering ON the printer.
3. The message `COLD RESET` is displayed. The `COLD RESET` does not take effect until the `00 READY` message is displayed.
4. When the `00 READY` message is displayed, the default settings have been returned to the factory defaults and the printer is ready to accept new settings.

Understanding the PCL Self Test Printout

(Refer to Appendix B for LaserJet 5 information.)

Table 3-10 Self Test Printout Items for the HP LaserJet 4/4M

Item Figure 3-3	Explanation
1	Standard Menu Selections: Shows standard menu selections, such as Printing Menu and PCL Menu, and menu items, such as Copies and MP tray, in the order they appear in the control panel display.
2	Optional Menus: Shows optional menu selections, such as the PostScript Menu and MIO Menu, and menu items, such as PRT PS ERRS, in the order they appear in the control panel display. An optional menu automatically is added to the control panel display and Self Test printout after the option is added to the printer.
3	MIO Menu: Once a Modular I/0 is added, it appears after the Serial Menu in the control panel display and in the Self Test.
4	MIO Information: Reserved for MIO and Network statistics. Note that for some installed MIO options, this block of information can take up to 20 lines and three columns.
5	Formatter Number: Shows the printer's unique formatter number.
6	RAM Size: Shows the total amount of installed printer memory, including added optional memory. Two MBytes of installed memory is standard with the printer. If you install optional memory, a self test can be used to verify proper installation.
7	Page Count: Shows how many pages were printed. You can use the page count to track printer use. The page count is always updated.
8	Datecodes: Eight-digit dates (YYYYMMDD) indicating when the formatter firmware and internal typefaces were last revised. This information may be of use to a service technician.
9	Other Installed Options: Use this area of the self test to verify the installation of typeface cartridges, paper trays, and other installed options.
10	Resolution Enhancement: The REt pattern only appears when the printer is in 600 dpi mode. The REt pattern varies with the RET setting. To optimize REt, adjust REt and density settings to minimize the appearance of vertical lines through the block.
11	Print Pattern: Use the text print pattern to check print density and quality.

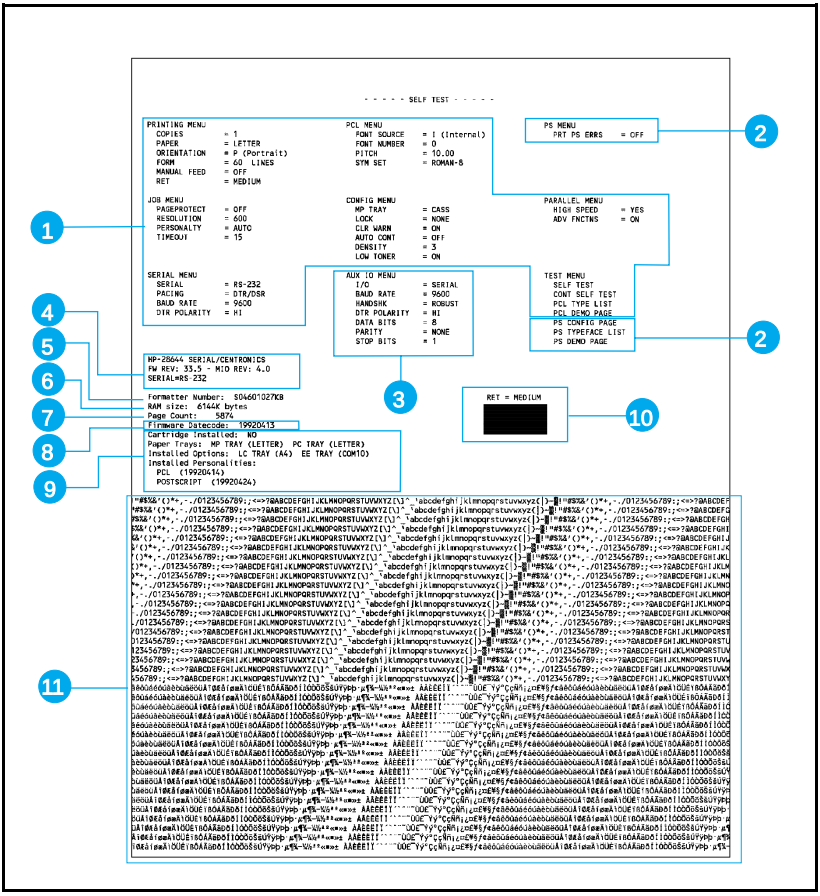

Figure 3-3 HP LaserJet 4/4M PCL Self Test Printout

Table 3-11 Self Test Printout Items - HP LaserJet 4 Plus/4M Plus

Item Figure 3-4	Explanation
1	**Standard menu selections:** Lists selections in the order in which they appear in the control panel display.
2	**Optional menus:** Shows optional menu selections, such as the PostScript Menu, and menu items, in the order in which they appear in the control panel display. Optional menus automatically appear in the control panel display when options are added to the printer.
3	**MIO Menu:** When an optional Modular I/O is added, the MIO Menu appears following the Serial Menu in the self test and control panel display.
4	**MIO information:** Reserved for MIO and network statistics. For some installed MIO options, this block of information can be as long as 20 lines and three columns.
5	**Formatter Number:** Shows the printer's unique formatter number.
6	**RAM size:** Shows total installed printer memory
7	**PCL Memory Information:** Shows the total amount of installed memory. Also indicates the amount of available memory for PCL applications.
8	**Page Count:** Shows number of pages the printer has printed.
9	**Firmware Datecode:** Eight-digit date (YYYYMMDD) and version number of formatter firmware.
10	**Control Panel options status:** Shows status of control panel Lock and Password functions.
11	**Other installed options:** Lists optional typeface cartridges, paper trays, personalities, and other installed options.
12	**Resolution Enhancement:** When resolution is set to 600-dpi, the REt block appears here. The REt block illustrates current resolution enhancement. To optimize REt, adjust REt and density settings to minimize the appearance of vertical lines through the block.
13	**I/O Buffering and Resource Saving:** Information about the current configuration appears here. If the printer does not have enough memory installed to enable I/O Buffering or Resource Saving, the amount of additional memory needed appears here.
14	**Print Pattern:** Illustrates print density and quality.

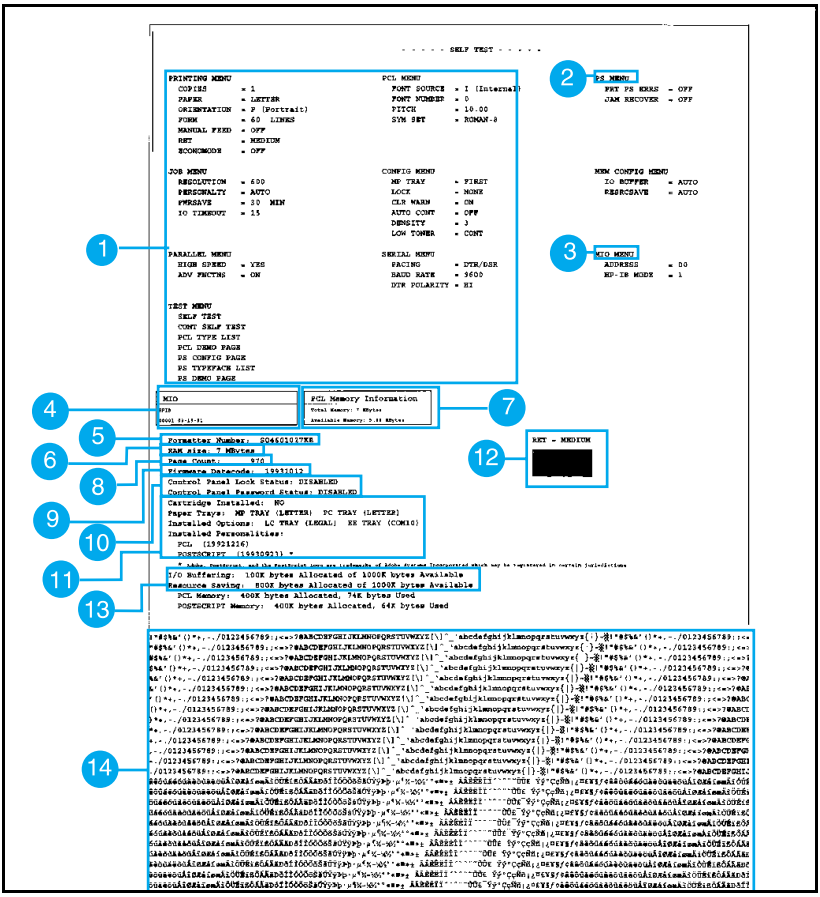

Figure 3-4 HP LaserJet 4 Plus/4M Plus PCL Self Test Printout

Changing the Control Panel Display Language

The default control panel display language is set for English. Supported languages are: English, French, German, Italian, Spanish, Finnish, Danish, Dutch, Swedish, Norwegian, and Portuguese. Follow these instructions to change the display language.

1. Switch OFF the printer.
2. Press and hold **Enter** (or **Select** on the LJ 5) while switching the printer ON until `CONFIG LANGUAGE` appears in the display.
3. After the power-on self test, `LANGUAGE=ENGLISH` appears. Press **+** until the desired language appears in the display.
4. Press **Enter** to save your choice. An asterisk (*)appears next to the language to indicate it is now the default.
5. Press **On Line**. The On Line indicator is lit, and display messages are now in the language you selected.

Note If the display language is changed, replace or install the Control Panel Overlay to match the selected language. See the index to Chapter 6 for instructions on changing or installing the Control Panel Overlay.

Note Failure to explicitly select a language after powering on the printer while holding down the **ENTER** or **SELECT** key will cause the printer to prompt for a specific language every time it is powered on.

Test Print Button

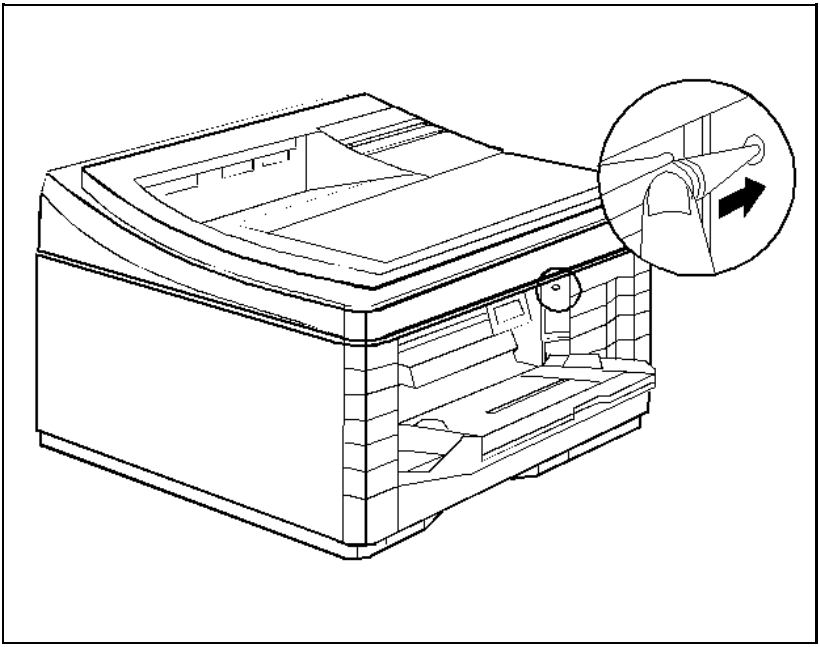

Figure 3-5 Test Print Button Location

The Test Print button access hole is located on the side of the printer. Press the Test Print button using a tool similar to a paper clip (see Figure 3-5). The `15 ENGINE TEST` only prints from the PC tray (Tray 2).

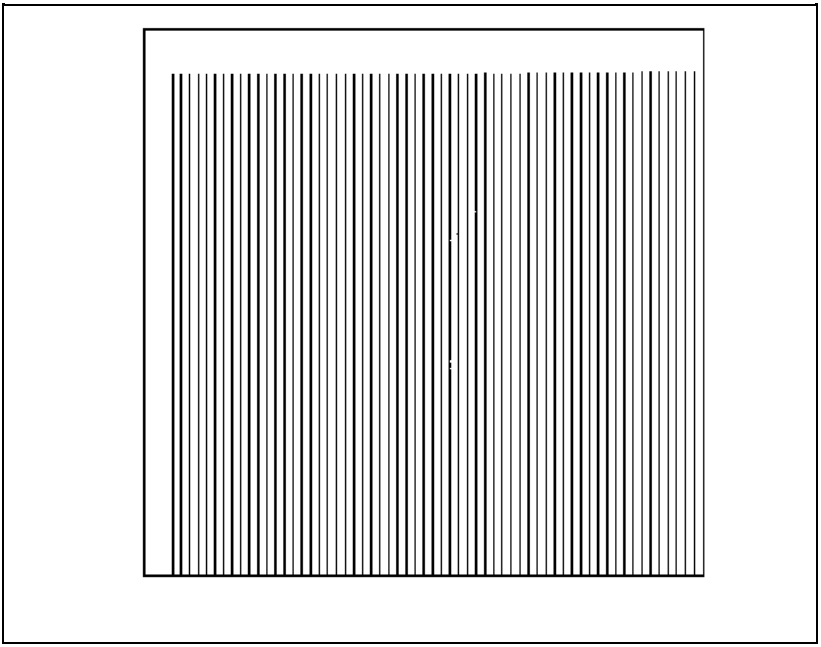

Figure 3-6 Test Print Pattern

Pressing the Test Print button will initiate a `15 ENGINE TEST`. This is an engine test only. The Format PCA is bypassed while printing this test, although a formatter problem can interfere with this test. A page of vertical lines is printed if the print engine is operating correctly (see Figure 3-6).

System Configuration

MS-DOS System Configuration

To communicate properly with the printer, the MS-DOS environment requires the addition or modification of MODE commands in the AUTOEXEC.BAT file. Add or modify the MODE command(s), depending on the interface configuration, as follows:

Parallel DOS Commands

Most IBM PC and AT compatible computers default to a parallel printer port. To ensure that information is sent to your parallel printer port, type the following MS-DOS command at your MS-DOS prompt or include it in your AUTOEXEC.BAT file:

```
MODE LPT1:,,P
```

For MS-DOS version 4.0 and above, enter:

```
MODE LPT1:,,B
```

Note This example assumes that you are using parallel printer port LPT1. If you are using LPT2 or LPT3, replace LPT1 in the example with the printer port that you are using.

Since the MODE command is an external MS-DOS command (a program named MODE.COM is run when the MODE command is invoked), the program file must be contained in the root directory, or in a directory specified in a preceding PATH command in the AUTOEXEC.BAT file.

Note After changing the AUTOEXEC.BAT file, reboot the computer to initiate the changes.

Serial MS-DOS Commands

Most IBM compatible computers default to a parallel printer port. To ensure that information is sent to your serial printer port, type the following MS-DOS commands at your MS-DOS prompt, or include them in your AUTOEXEC.BAT file.

```
MODE COM1:9600,N,8,1,P

MODE LPT1:=COM1
```

For MS-DOS version 4.0 or above, enter:

```
MODE COM1:9600,N,8,1,B

MODE LPT1:=COM1
```

Note These examples assume that you are using serial printer COM1. If you are using COM2 or COM3, replace COM1 with the the printer port that you are using.

Since the MODE command is an external MS-DOS command (a program named MODE.COM is run when the MODE command is invoked), the program file must be contained in the root directory, or in a directory specified in a preceding PATH command in the AUTOEXEC.BAT file.

Note After changing the AUTOEXEC.BAT file, reboot the computer to initiate the changes.

Printer I/O Configuration

Parallel Menu

The default setting for the High Speed Parallel I/O is YES. If it is set to NO, the interface runs at a slower speed that is compatible with older computers. When the default is set to YES, the parallel interface runs at a higher rate supported by newer computers.

Advanced Functions

The Advanced Functions feature of the printer enables bi-directional communications between the printer and the host. The default setting is *ON*. This default setting (*ON*) must be active in order to use LaserJet Explorer, the Windows Printing System, and other software applications and drivers.

Serial Configuration

Use RS-232C serial configuration when the printer is located 11 to 50 feet from the computer. If you need to locate the printer between 51 and 2000 feet from the computer, use an RS-422A serial configuration (not available on the LaserJet 4 Plus or 5).

Since the default-printer I/O setting on the printer is parallel, remember to change the settings on the printer control panel for serial printing.

Serial Protocol

When printing with a serial configuration, the same protocol must be set on both the printer and the computer. Protocol on the printer is set by changing the control panel. Protocol on the computer is set by using DOS commands. The default protocol settings are described below.

BAUD Rate

The BAUD-rate setting tells the printer how fast information is transferred to and from the computer. The default BAUD rate setting is:

```
BAUD RATE=9600*.
```

Pacing (Handshaking)

Pacing (or “handshaking”) is a type of communication between the printer and the computer. This is an important item in the printer because it allows the printer to tell the computer when to send information. If the printer is unable to receive information, for example, when the print buffer is full or when the printer is out of paper, a signal is sent to the computer to stop sending information. When the printer is able to resume receiving information, it sends another signal to the computer to send more data.

Pacing is set through the control panel’s Serial Menu. Two types of handshaking are supported by your printer:

- Select `DTR/DSR` through the Serial Menu’s `PACING` item if the computer requires hardware flow control (most personal computers do). Through the Serial Menu’s `DTR POLARITY` item, the DTR polarity can be set to High or Low. The default is `DTR POLARITY=HI`
- Select `XON/XOFF` through the Serial Menu’s `PACING` item if the computer requires software flow control (for example, if you are using a UNIX workstation). Note that status readback messages are not paced when `XON/XOFF` is selected. Through the Serial Menu’s `ROBUST XON` item, Robust Xon can be set to `ON` (the default) or `OFF`. Note that the `ROBUST XON` item only appears under the Serial Menu if `XON/XOFF` was selected.

Serial Cable Pin-outs

The following cable diagrams show the cable pinouts for the most common serial configurations.

DB-9 RS-232 Serial Connection — HP LaserJet 4

If the computer has a serial port with 9 pins, use the cable or equivalent for the HP LaserJet 4.

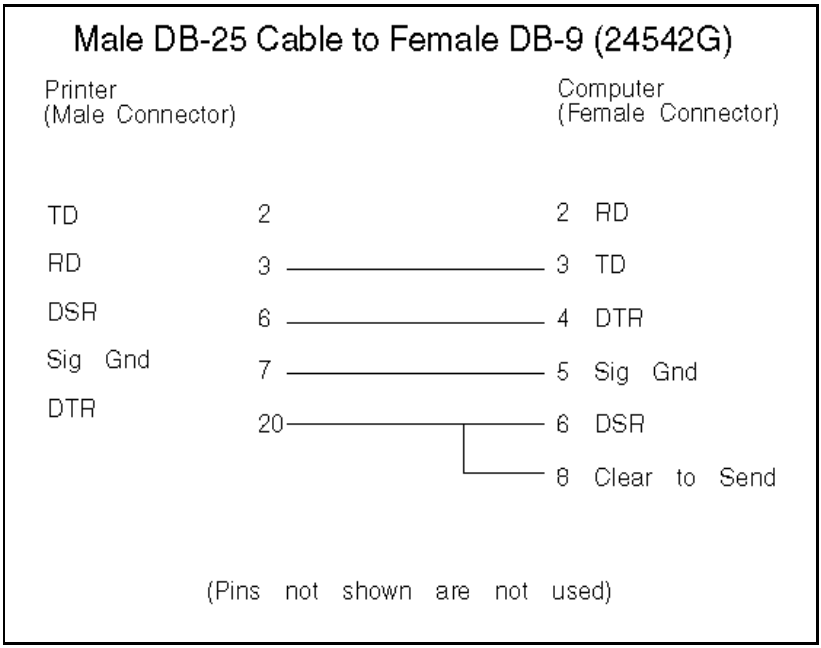

Figure 3-7 24542G Cable Pinout for 25 to 9 Pin Connector

DB-25 RS-232 Serial Connection — HP LaserJet 4 Plus/5

If the computer has a serial port with 9 pins, use the C2932A or equivalent cable for the HP LaserJet 4 Plus.

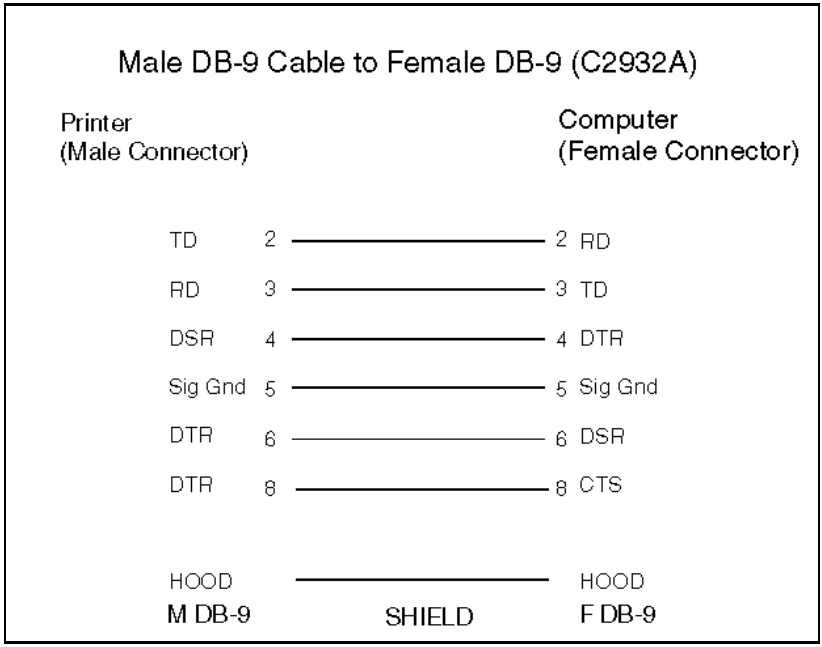

Figure 3-8 C2932A Cable Pinout for 9 to 9 Pin Connector

DB-25 Serial Connection — HP LaserJet 4

If the computer has a serial port with 25 pins, use the 17255D cable or equivalent for the HP LaserJet 4.

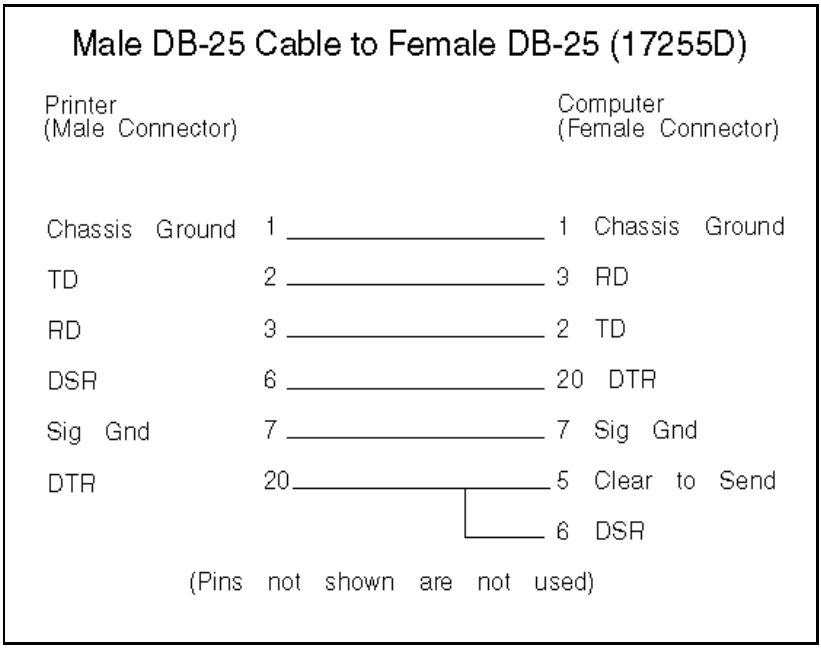

Figure 3-9 17255D Cable Pinout for 25 to 25 Pin Connector

DB-25 RS-232 Serial Connection — HP LaserJet 4 Plus/5

If the computer has a serial port with 25 pins, use the C2933A or equivalent cable for the HP LaserJet 4 Plus.

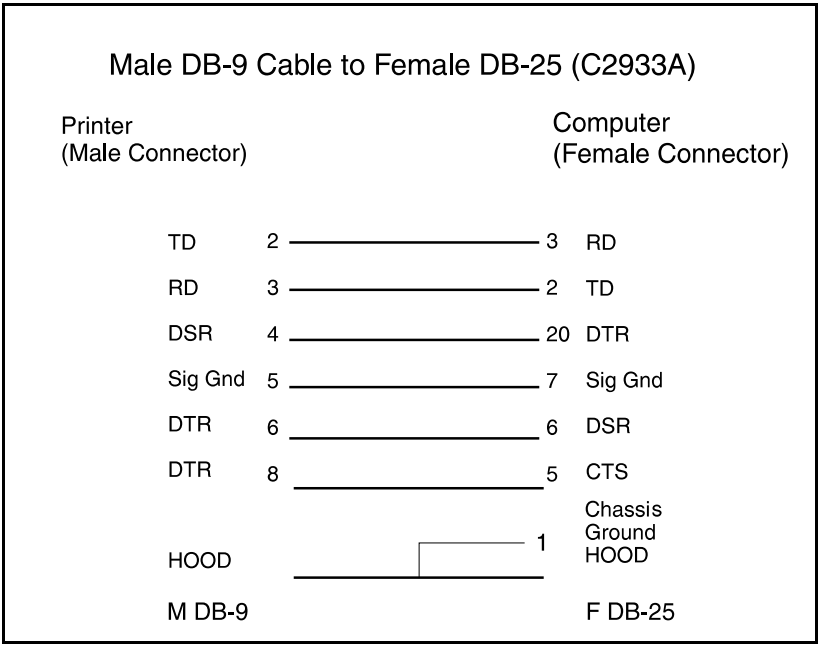

Figure 3-10 C2933A Cable Pinout for 9 to 25 Pin Connector

RS-422A Serial Connection (Not available on the HP LaserJet 4 Plus or 5 printers)

If you are configuring the computer to use an RS-422A serial port, you need a special cable. Contact the computer or printer network manufacturer to see if an RS-422A cable is available. If no cable is available, contact your computer manufacturer for your computer pin assignments and have a cable constructed.

Pin #	Description
1	CG - Chassis Ground
3	RDA - Receive Data Inverted
6	DSR - Data Set Ready
7	SG - Signal Ground
9	SDA - Send Data Inverted
10	SDB - Send Data
18	RDB - Receive Data
20	DTR - Data Terminal Ready

Pins not shown are not used.
Contact your computer manufacturer for your computer pin assignments.

Figure 3-11 RS-422A Cable Pinout

RS-422A Serial Configuration (LaserJet 4 only)

The default configuration for the serial port on the printer is for RS-232C serial communication. To set the printer to use RS-422A serial communication, change the control panel Serial Menu's `SERIAL` setting to `SERIAL=RS-422`.

Note Hardware pacing for RS-422 serial communication is not available on the printer.

Modular I/O Configuration

The printers are equipped with a modular I/O slot. A modular I/O interface card can be plugged into that slot to increase the number of interfaces available.

A modular I/O card can provide increased printer performance when printing from a network. In addition, a modular I/O card provides the ability to place the printer anywhere on the network. This eliminates the need to attach the printer directly to a server or a workstation, and enables you to place your HP LaserJet printer closer to your network users.

Note When you install a MIO card, you may need to perform a Cold Reset to reinitialize the printer's control panel.

The HP JetDirect Card allows these printers to operate in multiple operating system networks.

To determine the appropriate MIO solution for a specific host system/application environment, refer to the latest edition of the "HP Peripherals Connectivity Solutions Guide."

Printer Drivers

Install Printer Drivers and Utilities

Printer drivers are specialized programs designed to allow specific software applications to function with the HP LaserJet printers. Printer utilities include such things as the HP Explorer program modules, which enhance the usability of the printer and provide convenient access to printer features outside of specific software applications.

How to Obtain Printer Drivers

First, check the software's printer selection feature to see if the printer is listed among the available printers. If it is not, run the software's SETUP or INSTALL program to install a "printer driver" or "printer file" for the printer.

Here are some ways to obtain printer drivers and Software Application Notes for HP LaserJet printers:

- Check the Printing Software package to see if it includes a driver for your software.
- Order an updated driver from the software vendor.
- Call Hewlett-Packard at 970-339-7009.
- Obtain a driver request form by fax through HP FIRST (call 1-800-333-1917) U.S. only.
- Download a driver through CompuServe's HP Forum. To sign up for CompuServe, call 1-800-524-3388.

Note While waiting for a specific HP LaserJet printer driver, you can substitute a similar printer driver (such as a driver for the HP LaserJet III, IIIP, or 4 printer). These substitute drivers will allow you to use the printer, but they do not support all of the printer's features.

DOS Utilities

Use the DOS Utilities to install printer drivers for MS-DOS applications. Printer driver software for some common software applications are included the DOS Utilities. See the *Doing Business With HP* section of Chapter 1 for information on software drivers not included with the LaserJet DOS Utilities.

A DOS Utilities disk is shipped with every printer. If the DOS Utilities is not installed on the host computer, look for the DOS Utilities software disks in the documentation package that came with the printer and install the software.

Packing the Printer

Repackaging Instructions

The printer warranty is for one-year and must be returned to an Authorized HP service center for service. If the original packaging material is no longer available, replacement packing and shipping material is available from HP's Support Material Organization (SMO) for a charge. To order replacement packing and shipping material, call:

1-800-227-8164 (U.S.)

416-678-9430 (Canada)

To order the shipping box and packing inserts for the printers, ask for part number C2001-00906.

In other countries, return the printer to the selling dealer or the HP-authorized service center for your service area.

Packing Checklist

- Remove and retain any accessories that were installed in the printer. This includes:
  - Toner Cartridge
  - Optional Lower Cassette
  - Envelope Feeder
  - Accessory Cartridge
  - Duplex Assembly (LaserJet 4 Plus/5)
  - Optional Memory, Personality SIMMs, or Flash
- Include print samples that indicate the problem.
- If the problem is associated with media, include 50-100 sheets of the media causing the problem.

Installing The Optional Lower Cassette

Note Please see also the Service Notes section for proper use and adjustment of the lower cassette.

These printers have an optional 500-sheet Lower Cassette which is installed in the field. Follow these instructions to install the Lower Cassette.

1. Disconnect the cables from the printer.
2. Unpack the 500-sheet Lower Cassette Assembly.
3. Place the Lower Cassette base (without its paper tray) in the selected location.
4. Place the printer on top of the Lower Cassette Assembly, as shown in Figure 3-12.

Note Install the printer onto the Lower Cassette Base so that the alignment pins on the cassette base mate with the holes in the bottom of the printer.

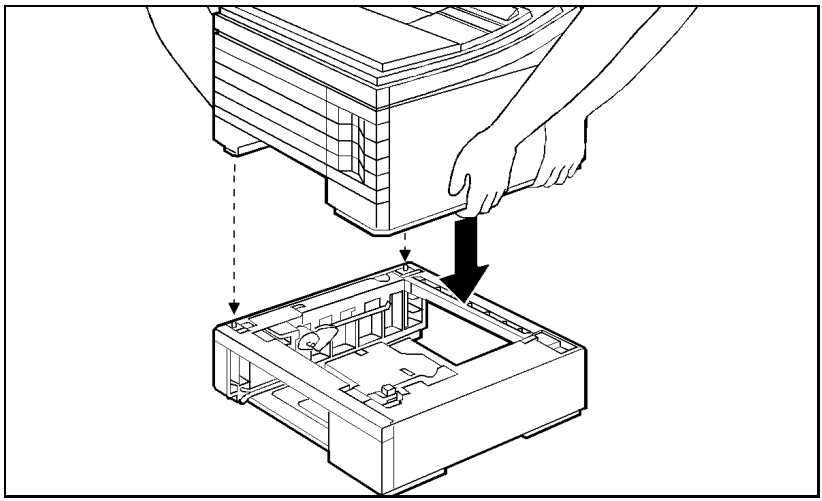

Figure 3-12 Installing the Printer on the Lower Cassette

5. Reconnect the printer cables and run a self test to ensure the lower cassette is recognized by the printer.

Loading Paper into the Optional Lower Cassette

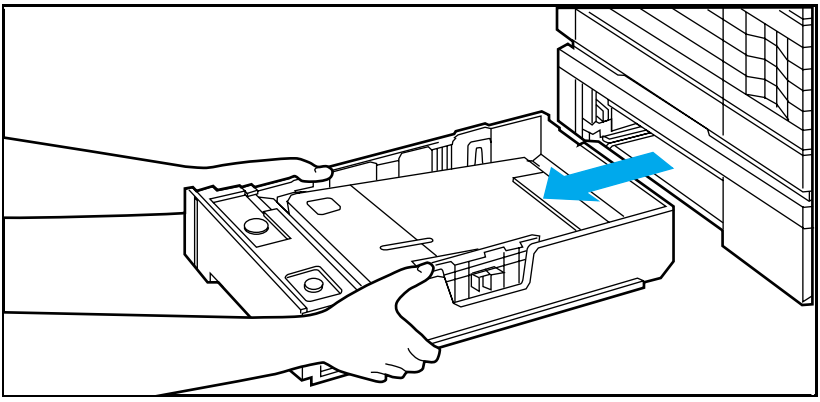

Figure 3-13 Pull the cassette tray straight out of the printer.

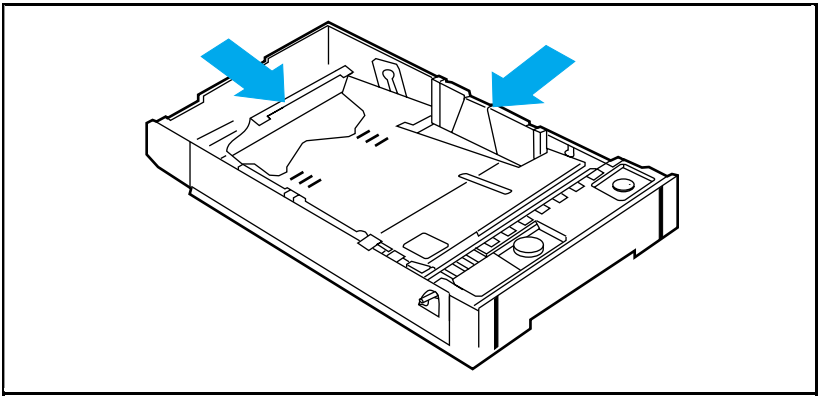

Figure 3-14 Adjust the cassette for the paper size you want to load.

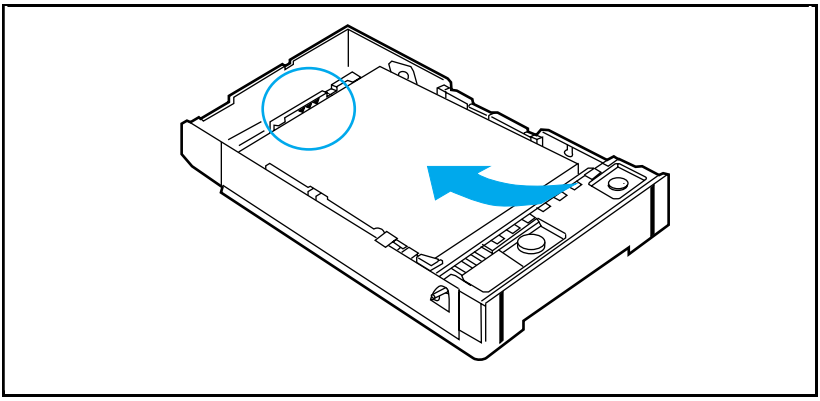

Figure 3-15 **Slide about 450 sheets of paper into the tray, up against the adjustable bracket that sets the paper length.**

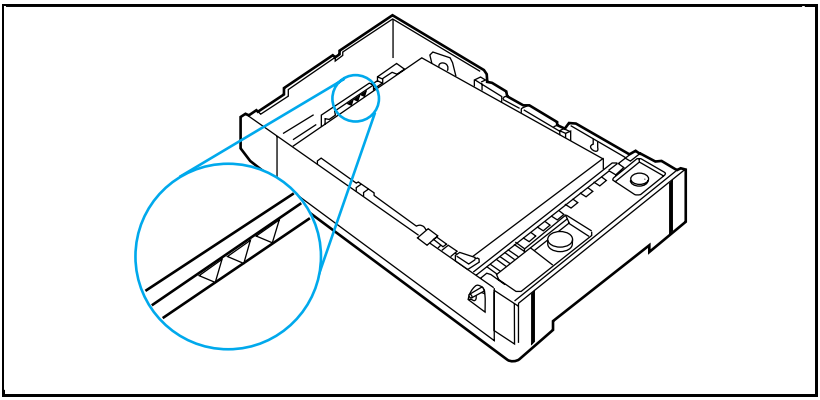

Figure 3-16 **Press down on the stack of paper until the top of the stack fits under the top edge of the back green bracket.**

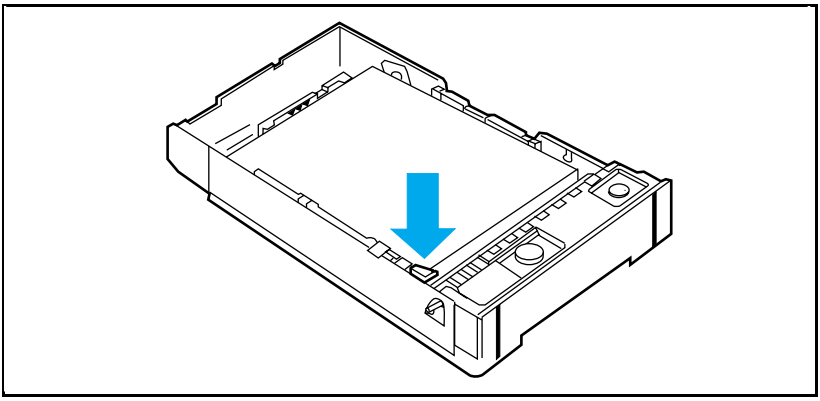

Figure 3-17 Push down the left corner of the stack until the paper is secured undered the metal clip.

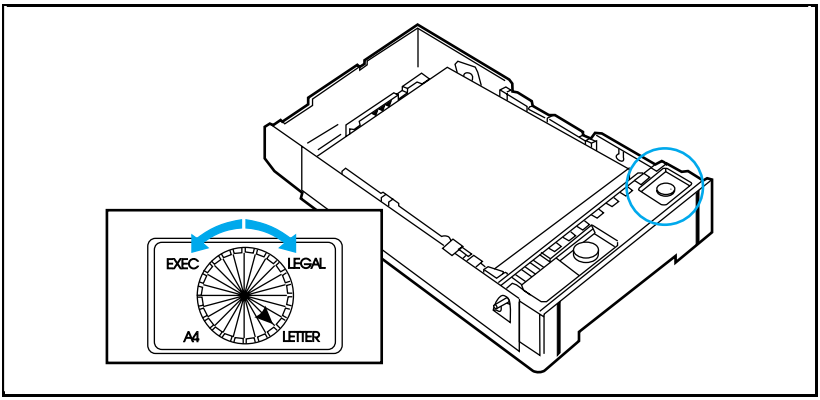

Figure 3-18 Set the knob on the top right of the cassette to the paper size you have loaded.

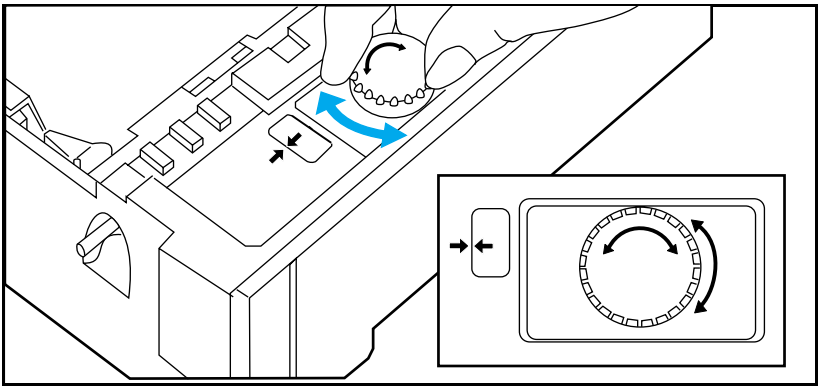

Figure 3-19 **Note: cassette MUST be full before adjusting the tension.**
To adjust the tension, tap the stack of paper several times and turn the leftmost knob on the cassette until the arrows on the indicator align. Tap the stack again and verify the arrows are still aligned.

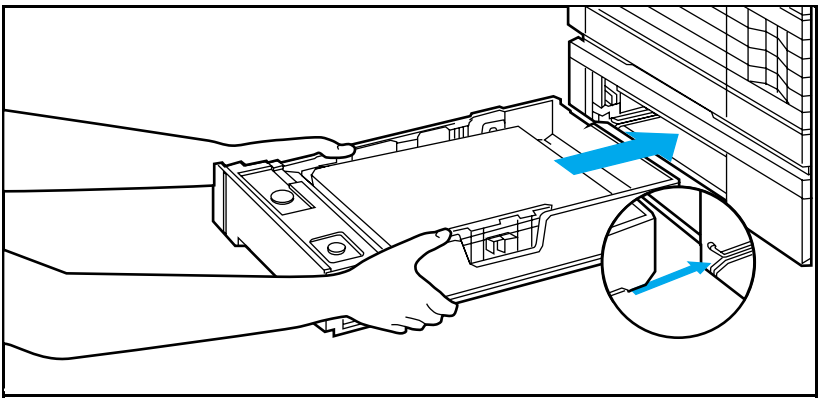

Figure 3-20 **Slide the cassette back into the Lower Cassette assembly.**

Envelope Feeder Installation

For complete information about installing the Envelope Feeder, see *Envelope Feeder User's Guide*. This guide is provided with the envelope feeder. The instructions below are not intended to replace the information of the *Envelope Feeder User's Guide*.

Note The LaserJet 4, 4 Plus, and 5 printers all use different envelope feeder products.

To install the Envelope Feeder:

1. Turn OFF the printer.
2. Open the MP tray.
3. Remove the black plastic cover from inside the printer (see Figure 3-21).

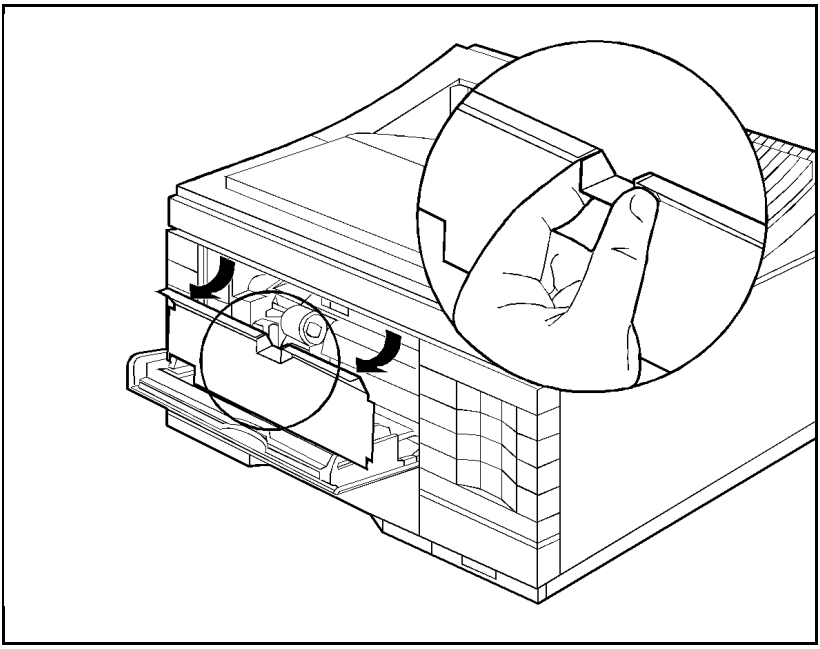

Figure 3-21 Remove the Black Plastic Cover

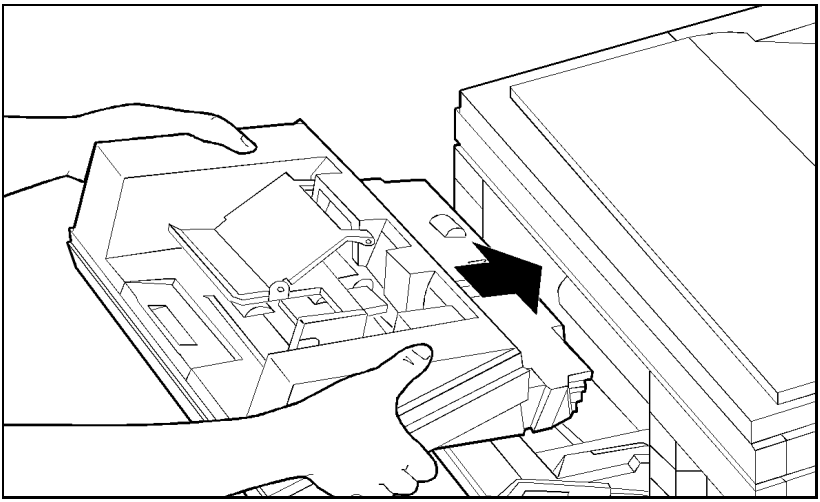

Figure 3-22 Install the Envelope Feeder

4 Insert the Envelope Feeder firmly into the printer (see Figure 3-22).
5 Turn ON the printer.

LaserJet 4 and 4 Plus

The envelope size (EE TRAY=) appears on the display when the envelope feeder is installed and loaded with envelopes. The envelope size can be selected through the Control Panel. Paper jams can result if the envelope size selected does not match the envelopes loaded into the envelope feeder.

LaserJet 5

The envelope size (ENV FEED=) appears in the CONFIG MENU when the envelope feeder is installed. The envelope size can be selected in the CONFIG MENU. Paper jams can result if the envelope size selected does not match the envelopes loaded into the envelope feeder.

Note It is not necessary to configure the Envelope Feeder to the printer through the printer's Control Panel. The printer automatically recognizes the presence of the Envelope Feeder and prints from the feeder as the software requires.

SIMM Installation

SIMM installation is covered in detail in the the printer's *User's Manual* and in the kit that accompanies the SIMM. The instructions shown here are not intended to replace these sources.

Follow these instructions to install memory, language, and flash SIMM boards. Install all types of SIMM boards in the same manner.

Protecting the SIMM Board

SIMM boards can be damaged easily by small amounts of static electricity. To prevent damage from static electricity:

- Touch the surface of the antistatic package before removing the board from its package. When handling the board, frequently touch bare metal on the printer or the antistatic bag, or wear an antistatic wrist strap.
- Avoid moving about the work area to prevent generating static electricity.
- Handle the board carefully at all times. Avoid flexing it or touching its components.

Any SIMM board can be installed in *any* of the four SIMM slots. Because the slots are close together, we recommend installing them from right to left, starting with slot 1 and ending with slot 4.

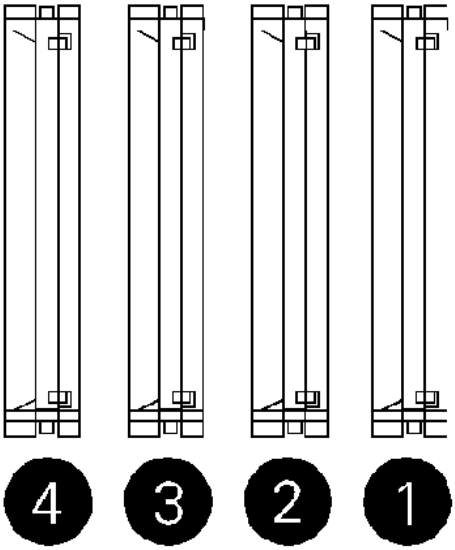

Figure 3-23 Identifying the Four SIMM Slots

Memory Requirements

A page's complexity (rules, graphics, or dense text) may exceed the printer's ability to create the image rapidly enough to keep pace with the printing process. If a page is too complex, only part of the page prints, and some print data loss is likely. In such cases, a `21 PRINT OVERRUN` message (signifying possible loss of print data) or a Clearable Warning message appears in the display.

Table 3-12 Minimum Memory Recommendations LaserJet 4 Only

	PCL Only		PostScript Only	
Resolution	**300 dpi**	**600 dpi**	**300 dpi**	**600 dpi**
Letter/A4 Pages[1] Page Protect OFF	2 (1.6)[2]	2 (1.4)	2 (1)	6 (2.3)
Legal Pages[1] Page Protect OFF	2 (1.6)	2 (1.4)	3 (1.7)	6 (1.3)[3]
Letter/A4 Pages[1] Page Protect ON	2 (0.8)	6 (1.9)	2 (1)	6 (2.3)
Legal Pages[1] Page Protect ON	3 (1.6)	6 (1)	3 (1.7)	6 (1.3)

1 More memory may be required if using downloaded soft fonts, forms, or complex text with a large number of downloaded typefaces.

2 Numbers in parentheses indicate the approximate amount of memory available to the user for data files, downloaded typefaces, and other non-system uses.

3 For PostScript language applications only, a "mini-legal" page will print with this amount of memory.

Caution When removing a board from the antistatic package, avoid touching the metal traces on the SIMM board.

For memory boards, compare the part number on the outside of the package to the part number in the table below. If you have not received the correct board, notify your authorized Hewlett-Packard dealer immediately.

Table 3-13 SIMM boards

Part Number HP LaserJet 4/4M	Size
C2063A	One MB
C2064A	Two MB
C2065A	Four MB
C2066A	Eight MB
HP LaserJet 4+/4M+/5/5M/5N	**Size**
C 3130A	One MB
C3131A	Two MB
C 3132A	Four MB
C 3133A	Eight MB
C 3146A	Sixteen MB

The LaserJet 4 Plus Optional Memory (C3130A, C3131A, C3132A, C3133A, or C3146A) is not compatible with the HP LaserJet 4. If the LaserJet 4 Plus Optional Memory is installed in the LaserJet 4, the printer will display a "`53.1X.08 ERROR`" (X indicates the position of the SIMMs slot).

Accessing the SIMM Slots

Please refer to Chapter 6, Removal and Replacement, for instructions on removing the SIMMS door to access the slots.

Note that access to the SIMM slots are slightly different for the various printer models.

Installing the SIMM Boards

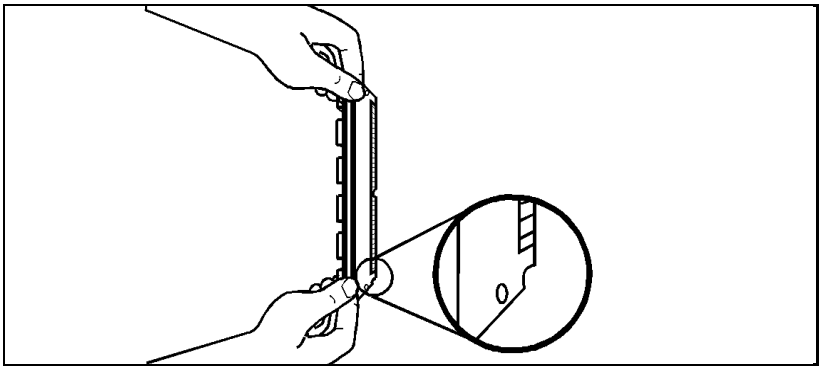

Figure 3-24 Positioning the SIMM board with the notch at the bottom.

1. Through the open door, you can see the four SIMM board slots (see previous Figure 3-23). For easiest installation, fill the slots from right to left, starting with slot 1 (see the diagram on the SIMM slots door).
2. Remove the SIMM board from the antistatic package. Hold the board with your forefingers on the side edges and your thumbs against the back edge. Turn the board so the notch on one end is on the *bottom* and the metal teeth face the slot (see Figure 3-24.

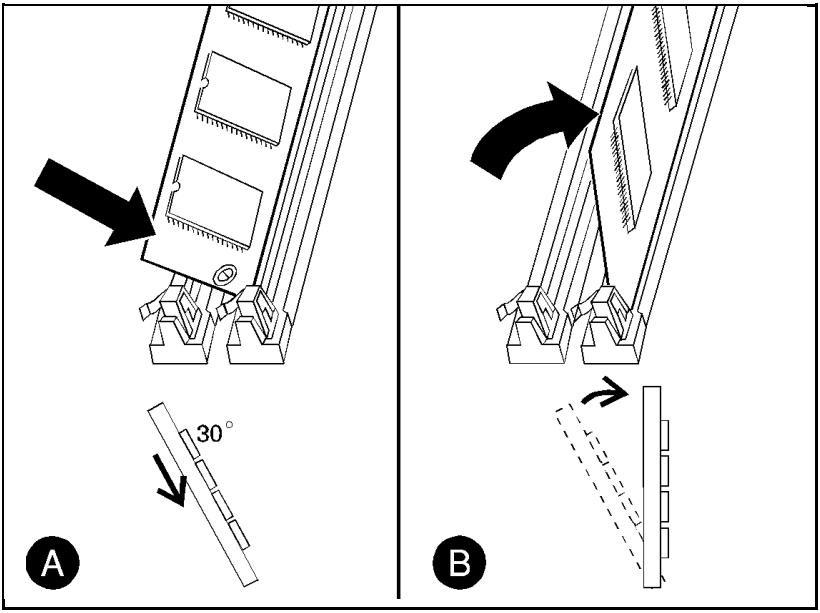

Figure 3-25 Installing the SIMM Board

3 Hold the SIMM board at a 30-degree angle to the slot and push the edge of the board evenly and firmly into the slot (see Figure 3-25 callout *(A)*).

4 Rotate the SIMM board to the right until the board “clicks” into the metal locking tabs, securing the board into place (see Figure 3-25 callout *(B)*).

5 Gently rock the SIMM board back and forth. If it is seated correctly, it will not lift away from the slot. If it lifts up, you have not pushed it firmly enough into the slot. Try again.

6 Replace the SIMM door and screws.

7 Replace the right side cover.

8 Close the top front cover and gently press down on each end until the cover is completely seated.

Testing a SIMM Board

Use the procedures below to print a self-test page to verify SIMM board installation. Procedures are given for both memory and PostScript SIMMs.

Memory SIMM

Note For the LaserJet 5/5M/5N, the **On Line** key has been replaced by the **Go** key. The **Enter** key has been replaced by the **Select** key.

Running a Self Test Printout

1. Plug in the power cord and turn ON the printer.
2. After a few seconds, `00 READY` should appear in the control panel display. If an error message appears, refer to "Troubleshooting a SIMM Board" later in this chapter.
3. Press **On Line** to take the printer off line.
4. Press **Menu** until `TEST MENU` appears in the control panel display.
5. Press **Item** until `SELF TEST` appears in the control panel display.
6. Press **Enter** to print a self test.
7. Press **On Line** after the self test printed.

Locate "RAM SIZE" on the self-test printout. This is the amount of printer memory now installed in the printer.

Personality SIMM (PostScript)

A personality (printer language) SIMM installation can be verified as outlined below (a PostScript SIMM is used in this example).

Note For the LaserJet 5/5M/5N, the **On Line** key has been replaced by the **Go** key. The **Enter** key has been replaced by the **Select** key.

1 Plug in the power cord and turn ON the printer.
2 After a few seconds, the on line indicator should light and `00 READY` should appear in the control panel display. If an error message appears, refer to "Troubleshooting a SIMM Board" following.
3 Press **On Line** to take the printer off line.
4 Press **Menu** until `JOB MENU` appears in the control panel display.
5 Press **Item** until `PERSONALITY=AUTO*`, the default, appears in the control panel display.
6 Press **+** until `PERSONALITY=PS` appears in the display. This indicates that your printer recognizes that PostScript is installed. If `PERSONALITY=PS` does not appear, check the SIMM installation.
7 Press **On Line** to return the printer on line.

Troubleshooting a SIMM Board

For more information about the service/error messages below, see Chapter 7, *Troubleshooting*.

Service / Error Messages

One of two messages can be generated when your printer is checking its SIMM internal memory.

```
61.X SERVICE
```

where X = 1, 2, 3, or 4

This error indicates a SIMM parity error. The x indicates which SIMM slot generated the error. If these messages appear first, check the HP part number to make sure you have the right SIMM board.

```
62.X ERROR
```

where X = 0, 1, 2, 3, 4, or 5

This error indicates your printer identified a problem while checking memory.

If x=0, the problem is in internal Read Only Memory (ROM) on the Formatter.

If x = 1, 2, 3, or 4, the problem is in SIMM slot 1, 2, 3, or 4.

If x = 5, the problem is in an external cartridge installed in the printer.

Refer to chapter 7 for more information.

4

Preventive Maintenance

Introduction

The printer requires minimum routine maintenance. Use this chapter for information on:

- Service Checkpoints. These are the items that must be cleaned and checked when the Toner Cartridge is replaced, or before performing periodic maintenance.
- Toner Cartridge information, such as:
  - Storing and installing the Toner Cartridge
  - Refilled Toner Cartridges
  - `16 TONER LOW` message
- Required periodic maintenance on:
  - Transfer roller
  - Separation pads
  - Paper pickup rollers

Life Expectancy of Consumables

Always inspect the components listed in Table 4-1 for wear when servicing the printer. Replace these components as needed, based on printer failures or wear, not strictly on usage.

Table 4-1 Selected Service Consumables

DESCRIPTION	QTY	EST. LIFE (pages)	REMARKS
1. Toner Cartridge	1	6800[1]	When print becomes faint, shake cartridge to distribute remaining toner.
2. MP (Tray 1) Pickup Roller Assembly	1	200,000	Replace roller and separation pad together.
3. PC (Tray 2) Pickup Roller	1	200,000	Look for glazing and cracks.
4. Separation Pad	1	200,000	Look for glazing and grooves. Replace together with Pickup Rollers.
5. Transfer Charging Roller	1	200,000	May affect print quality and/or paper jams.
6. Fuser Assembly (115 V, 50/60 Hz)	1	200,000	May affect print quality and/or paper jams. Look for marks on rollers.
Fuser Assembly (220 V, 50 Hz)	1	200,000	
7. LC (Tray 3) Pickup Roller	1	200,000	Look for glazing and grooves. Replace the Separation Pad.
8. Exhaust Fan	1	25,000 hrs.	

Notes:
[1] The estimated Toner Cartridge life is based on A4 or letter size prints with an average of 5% toner coverage, and with the density setting at 3.

Note For part numbers of the components listed in Table 4-1, see Chapter 8.

Service Checkpoints

This is a fold-out page 3 panels wide.

Figure 4-1 Maintenance Checkpoints

Cleaning Your Printer

When it is time to replace the toner cartridge, perform the cleaning procedures outlined in Figure 4-1.

Toner Cartridge

The toner cartridge in your printer contains the printing mechanism and a supply of toner. *Your toner cartridge life depends on the amount of toner your jobs require.* When you print word-processed text, a toner cartridge lasts approximately 6,800 pages, printed at 5% coverage. (A typical business letter, as shown in Figure 4-2, is about 5% coverage.) This assumes that the print density setting is in the middle range (set to 3 in your printer's control panel).

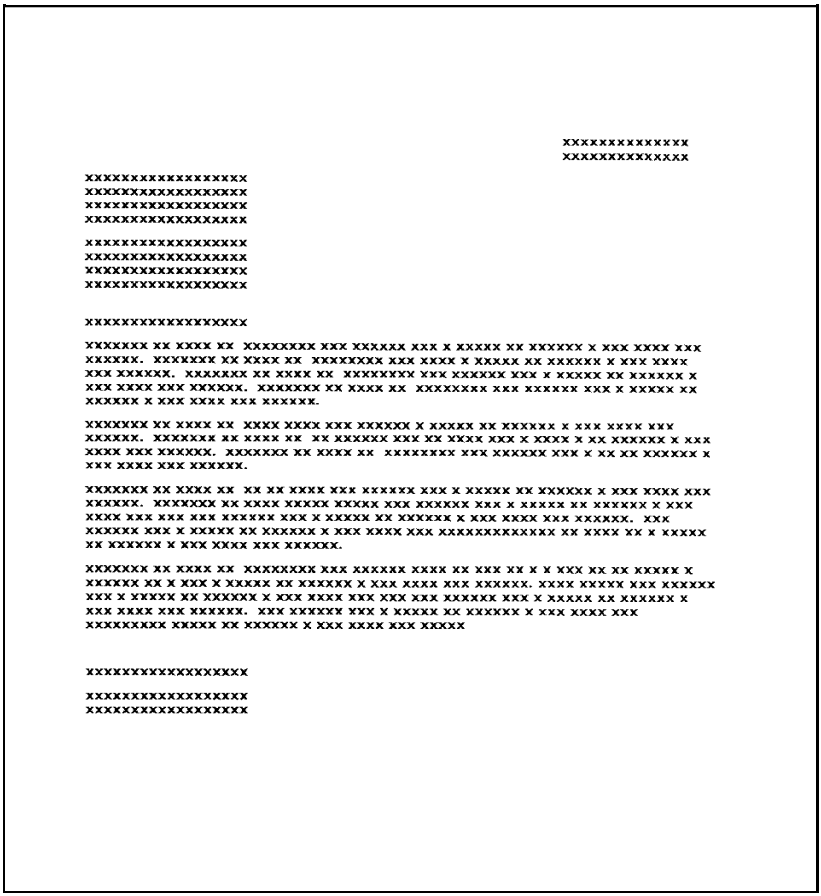

Figure 4-2 **Example of a page having approximately 5 Percent Toner Coverage**

Saving Toner with EconoMode (HP LaserJet 4 Plus and 5 Only)

Toner cartridge life can be extended dramatically by using the EconoMode printing feature of the printer. EconoMode can be turned on or off via the printer control panel, through HP's Remote Control Panel or through a software application with the appropriate printer driver.

Note

EconoMode is recommended in portrait orientation only.

Some software applications may refer to this as "draft mode".

Software settings always override control panel selections.

Storing the Toner Cartridge

Do not remove the toner cartridge from its packaging until you are ready to use it. The shelf life of an unopened cartridge package is approximately 2 ½ years of storage including usage; the maximum shelf life of an opened cartridge package is approximately six months including usage.

Use the toner cartridge before the expiration date which is printed on its shipping box.

Always store cartridges:

- As specified on the shipping box, or horizontally (flat) if removed from the box.
- In a normal office environment (for example, a location with regulated temperature and humidity).
- Away from direct sunlight or other strong light.

Installing the Toner Cartridge

The toner cartridge is empty and must be replaced when the toner low message cannot be cleared, as described in “Clearing the `16 TONER LOW` Message” later in this section.

To replace the toner cartridge:

1 Open the printer’s top cover and remove the empty toner cartridge.

Note Inside the new HP toner box is a document which explains HP’s toner cartridge recycling policy. Follow the instructions to package the empty toner cartridge and return it for recycling.

2 Remove the new toner cartridge from its box and remove the storage bag.

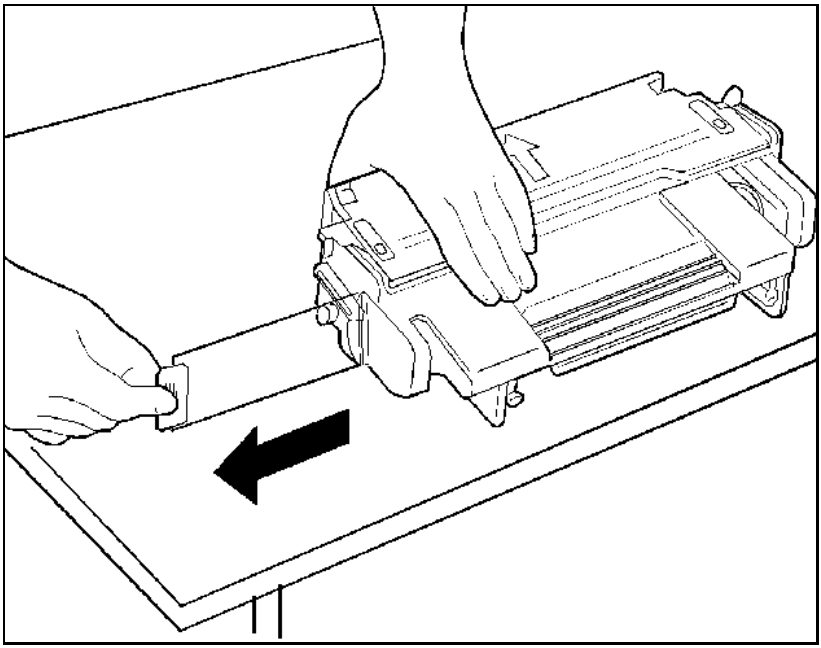

Figure 4-3 Removing the Toner Cartridge Sealing Tape

3 Remove the sealing tape by firmly grasping the tab on the right side of the toner cartridge and pulling it straight out the side of the cartridge. (See Figure 4-3.)

Note Pulling the toner cartridge at an angle may damage the toner cartridge seals.

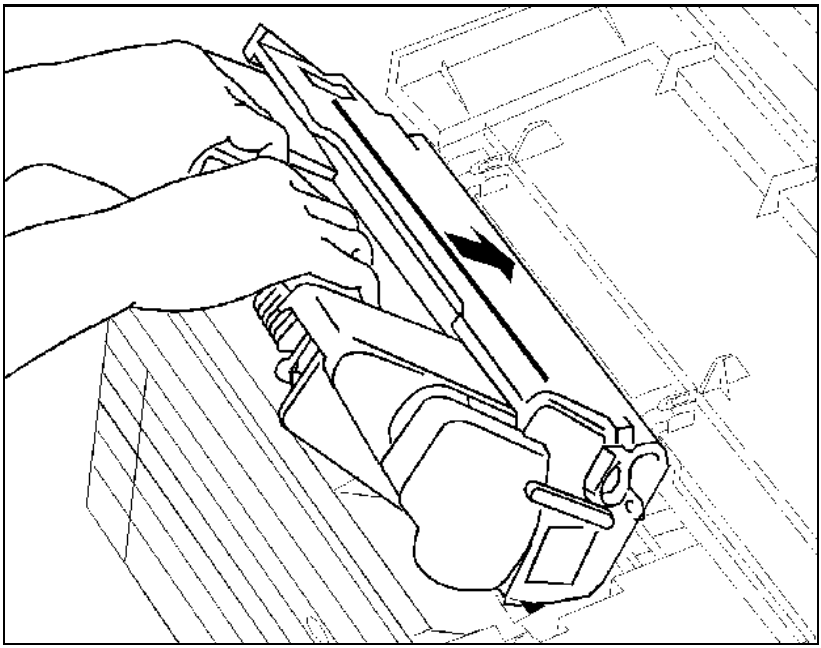

Figure 4-4 Inserting the Toner Cartridge

4 Position the cartridge with the arrow pointing into the printer as shown in Figure 4-4.
5 Insert the toner cartridge fully into the printer (press firmly).
6 Close the top cover and press **On Line** (or **Go** on the LJ 5) to resume printing.

Non-HP Toner Cartridges

While Hewlett-Packard does not prohibit the use of Non-HP toner cartridges during the warranty period or while under a maintenance contract, we do not recommend their use. The reasons for this are:

- Hewlett-Packard has no control or process to ensure that a Non-HP toner cartridge functions at the high level of reliability of an HP LaserJet toner cartridge. Hewlett-Packard also cannot predict what the long term reliability effect on the printer is from using different toner formulations found in Non-HP cartridges.
- Hewlett-Packard has no control over the actual print quality of a Non-HP toner cartridge. The print quality of HP LaserJet cartridges influences the customer's perception of the printer. The high print quality of HP LaserJet printers is one of the primary reasons for the success of the product and we are keenly interested in maintaining that image.
- Repairs resulting from the use of Non-HP toner cartridges are not covered under the HP warranty.

Clearing the TONER LOW Message

If the 16 TONER LOW message appears in the control panel display, the toner level in the toner cartridge is getting low. The print becomes lighter and white streaks may appear. (This message means that it is time to replace the toner cartridge).

If the control panel Config Menu Toner Low item is set to TONER LOW=ON (or CONT on the LJ4+ and LJ5 printers), the printer continues to print with the 16 TONER LOW message in the control panel display. TONER LOW=ON is the default setting.

A Configuration Menu setting TONER LOW=OFF (or STOP on the LJ4+ and LJ 5 printers) is available that causes the printer to go off-line and to stop printing when low toner is detected. If TONER LOW=OFF (or STOP) is selected from the Configuration Menu, you must press **Continue** (or **Go** on the LJ 5) to resume printing. Use the TONER LOW=OFF (STOP) setting when sharing the printer with other users, or when using MICR cartridges.

You can improve the print quality *temporarily* by redistributing the toner as follows:

1. Remove the toner cartridge.
2. Rotate the toner cartridge about its horizontal axis (i.e., not end over end) to redistribute toner.
3. Reinsert the toner cartridge and press **On Line** (or **Go** on the LJ5).

The 16 TONER LOW message still may appear, but the print quality should improve. If the print remains light, replace the toner cartridge immediately. Install the new cartridge as described in the instructions included with the cartridge.

Periodic Maintenance Procedures

Each paper source has a Paper Pickup Roller that should be replaced when paper no longer feeds reliably. The MP Tray (Tray 1) Paper Pickup Roller is shown in Figure 4-5. The PC tray (Tray 2) Pickup Roller is shown in Figure 4-7, the LC (Tray 3) Pickup Roller is shown in Figure 4-8.

Removing the MP Tray (Tray 1) Pickup Roller and Separation Pad

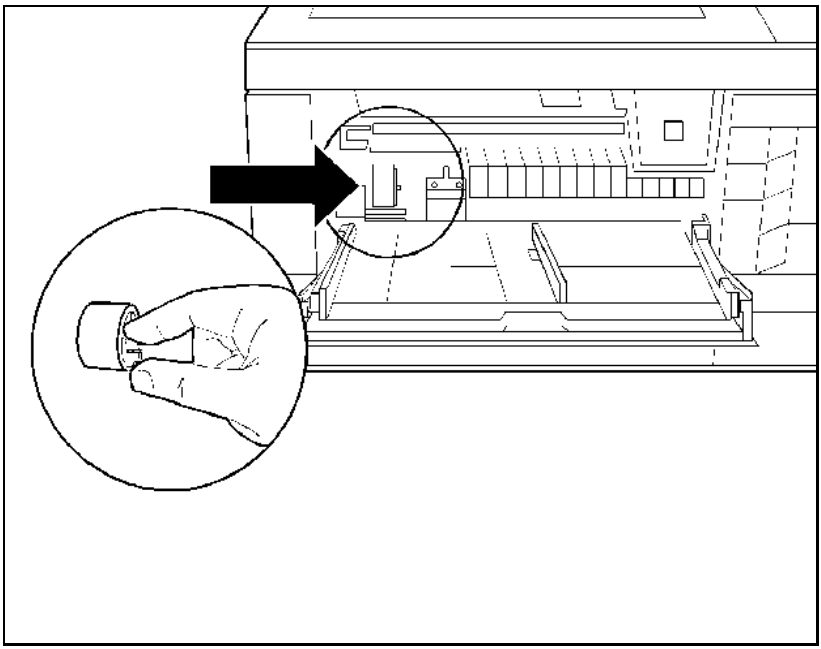

Figure 4-5 Removing the MP Tray (Tray 1) Pickup Roller

To remove and replace the MP (Tray 1) Pickup Roller and Separation Pad, follow the steps below.

1. Turn OFF and unplug the printer.
2. Remove the MP Tray (Tray 1) inner black plastic cover.
3. Remove the roller by pinching the plastic retaining clip at the side of the roller and sliding it off its shaft (see Figure 4-5). (You may find it easiest to pinch the clip with your *right* hand and use your *left* index finger to slide the roller to the right.)

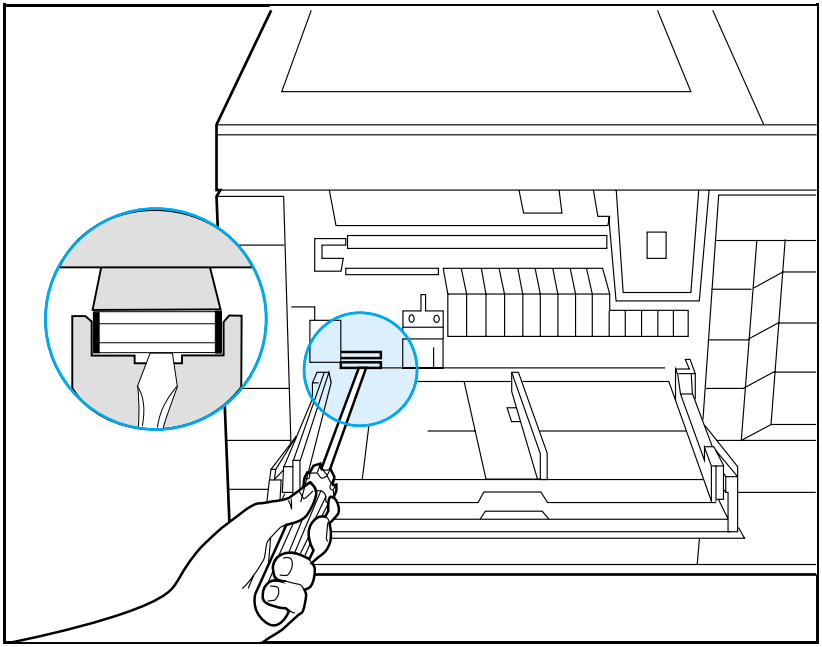

Figure 4-6 Removing the MP Tray (Tray 1) Separation Pad

4 Insert a small screwdriver into the indent at the front of the separation pad and gently lift the pad from its seat (see Figure 4-6).

5 Discard the used roller and pad.

Removing the PC (Tray 2) Pickup Roller

The PC Pickup Roller is underneath the printer (see Figure 4-7). To remove the Pickup Roller:

1. Turn OFF and unplug the power cord from the rear of the printer. If your interface cable is long enough, it may stay attached, if not, remove it also.
2. Remove the Toner Cartridge and the PC tray (Tray 2).
3. Lay the printer on its left side.
4. Remove the PC (Tray 2) Pickup Roller by pinching the release clips and sliding the roller off the shaft.

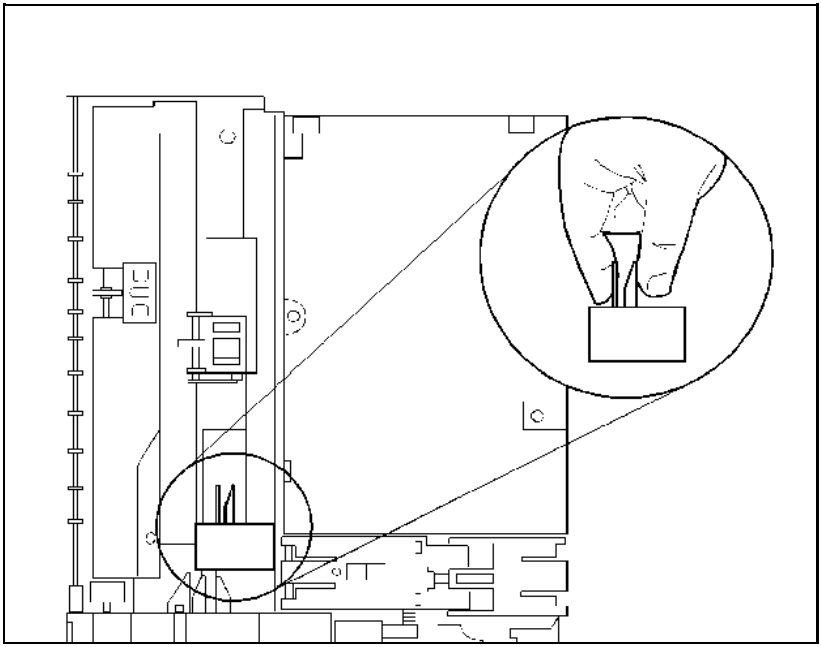

Figure 4-7 Removing the PC (Tray 2) Pickup Roller (printer is turned on its left side)

Removing the Lower Cassette (LC) or (Tray 3) Pickup Roller

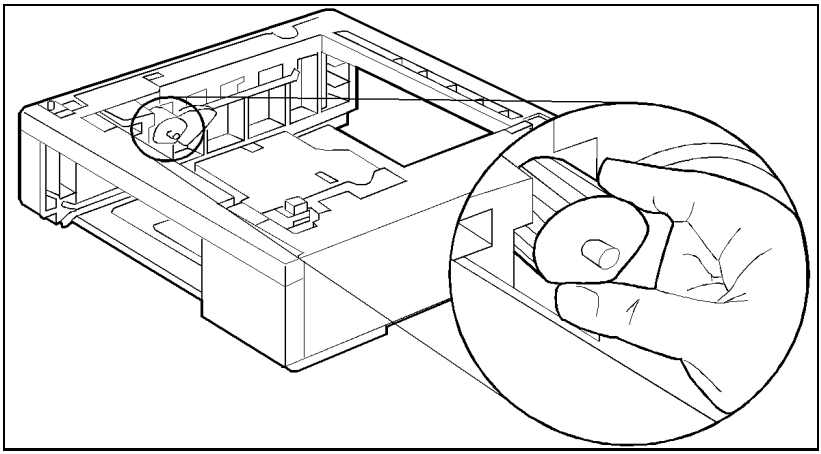

Figure 4-8 Removing the Lower Cassette Pickup Roller

If your printer is equipped with the Lower Cassette Assembly, proceed as follows:

1 Remove the Lower Cassette Tray.
2 Press the retainers that hold the roller in place (see Figure 4-8).
3 Slide the Pickup Roller off the shaft.

Removing and Replacing the Transfer Roller

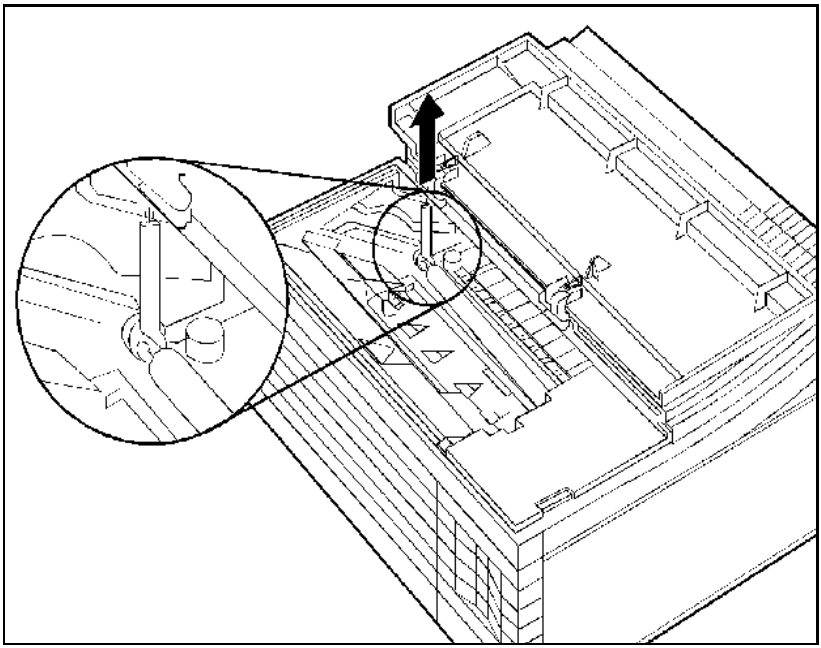

Figure 4-9 Replacing the Transfer Roller

The Transfer Roller is the black sponge-rubber roller located inside the printer just to the front of the black plastic Paper Feed Guide (see Figure 4-9). To remove and replace the Transfer Roller, follow these steps.

Note Do not handle the new Transfer Roller unnecessarily. Oils will build up on the roller and cause print quality problems.

Removing the Transfer Roller

1. Turn OFF and unplug the printer.
2. Open the printer's top cover.
3. Remove the Toner Cartridge.
4. Use the hook inside the top cover to remove the Transfer Roller as follows. Hook the left side of the chrome rod beside the sponge roller, and lift the roller out.
5. Discard the used roller.

Replacing the Transfer Roller

1. Slide the right end of the new roller (the end without the gear), onto the right slot. Press the rod into the slot.
2. Lower the gear end of the roller into place.
3. Install the toner cartridge.
4. Replace the hook tool.
5. Close the top cover.
6. Plug in the power cord and switch the printer ON.

5

Functional Overview

Introduction

This section of the manual presents a functional overview of the printers. It provides the Service Representative with an understanding of the printing process. Refer to the block diagram of Figure 5-1 to see the relationship of the parts as a whole.

This chapter discusses the following printer functions:

- **DC Controller System**
- **Formatter System**
- **Image Formation System**
- **Paper Feed System**
- **Power System**
- **Basic Sequence of Operation**

DC Controller System

The DC Controller PCA is responsible for coordinating all activities involved in the printing process. The DC Controller enables the drive circuitry for the laser beam, and coordinates print data from the Formatter PCA with paper size, laser beam motion, the high voltage system, fuser temperature, and motors. The DC Controller also shares machine status information with the Formatter PCA so that proper diagnostic messages are displayed on the control panel.

The DC Controller communicates with the Paper Control PCA, the High Voltage PCA, the Envelope Feeder, Lower Cassette Assembly and Duplex Assembly by way of two serial data lines (SLI and SLO). One line (SLO) is used for sending commands, the other (SLI) is used for receiving status information from the selected devices. The amount of toner in the Toner Cartridge also is monitored indirectly with information on the serial data line.

In summary, the following systems and functions are controlled and/or monitored by the DC Controller:

- **Paper Motion**
- **Laser and Scanner Drive**
- **Timing**
- **Machine Status**
- **Paper Size and Availability**
- **High Voltage System**
- **Fusing Temperature**
- **Main Motor Drive**
- **DC Power Supply**
- **Toner Level**

DC Controller Loads

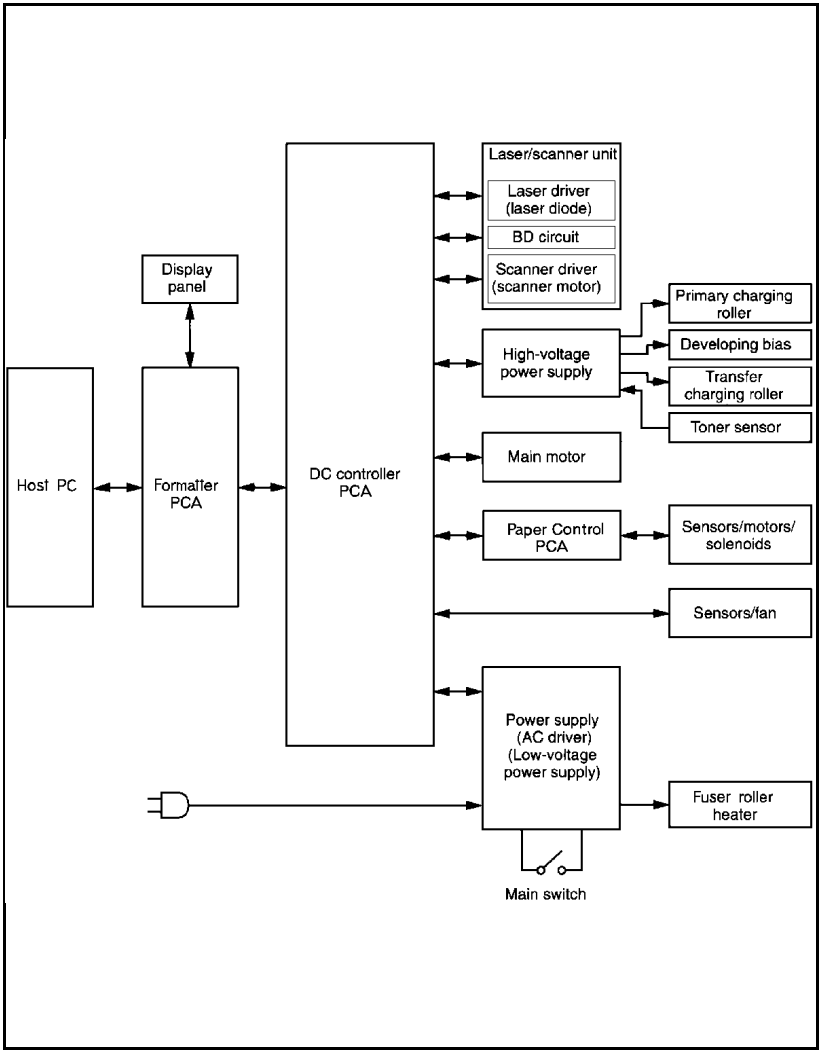

Figure 5-1 DC Controller Loads

Serial Data Communication

The printer communicates with and controls the Paper Feeder, the Lower Cassette Assembly, and the Envelope Feeder through serial data lines SLI and SLO. In addition, the DC Controller uses information encoded on SLI from the High Voltage Transformer to monitor the toner level.

Communicating with the various subassemblies of the printer through serial data lines allows many of the functions of the processor on the DC Controller to be off-loaded to local State Machines on the subassemblies. The DC Controller uses data line SLI to receive status information (such as Ready, or Paper Out) from the subassemblies. Data line SLO is used to issue commands or to request status.

The State Machines on the subassemblies operate on a clock synchronous to the DC Controller processor. The printer serial data lines use serially encoded data protocol to receive and send information.

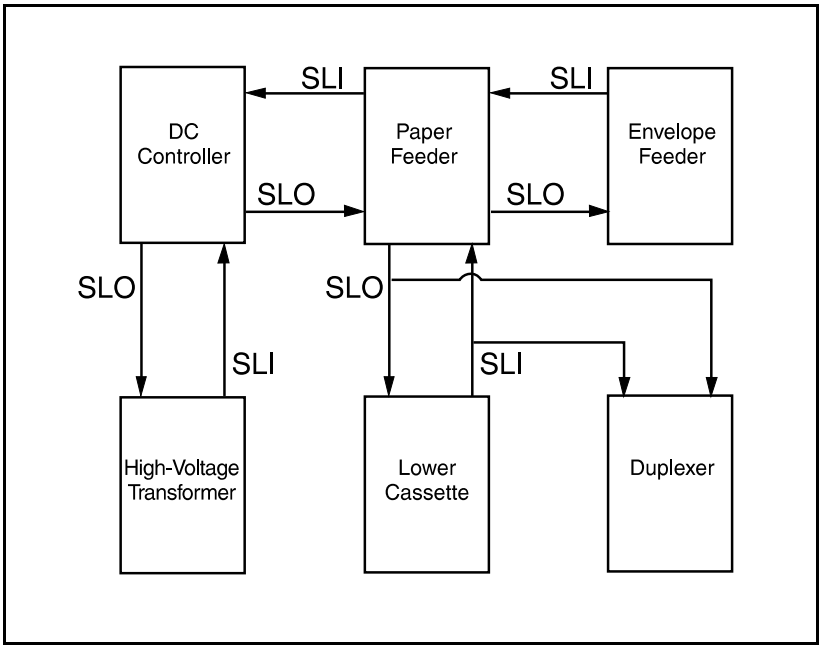

Figure 5-2 Serial Data Flow

Solenoids

Solenoids are controlled by the DC Controller. Each solenoid drives a specific roller (see Table 5-1). The DC Controller outputs +24B VDC to energize the solenoids at the proper time. When either of the doors are open, the +24B VDC is removed and the solenoids are disabled.

Table 5-1 Solenoid Signals

Solenoid	Description	PCA
SL1	PC tray (Tray 2) Pickup Roller Clutch Solenoid	Paper Control PCA (J704)
SL2	Multi-purpose (MP) Tray (Tray 1) Pickup Roller Clutch Solenoid	Paper Control PCA (J702)
SL3	Lower Cassette (LC or Tray 3) Pickup Roller Clutch Solenoid	Lower Cassette (J853) located in Lower Cassette Drive Assembly. See Chapter 8 for location.

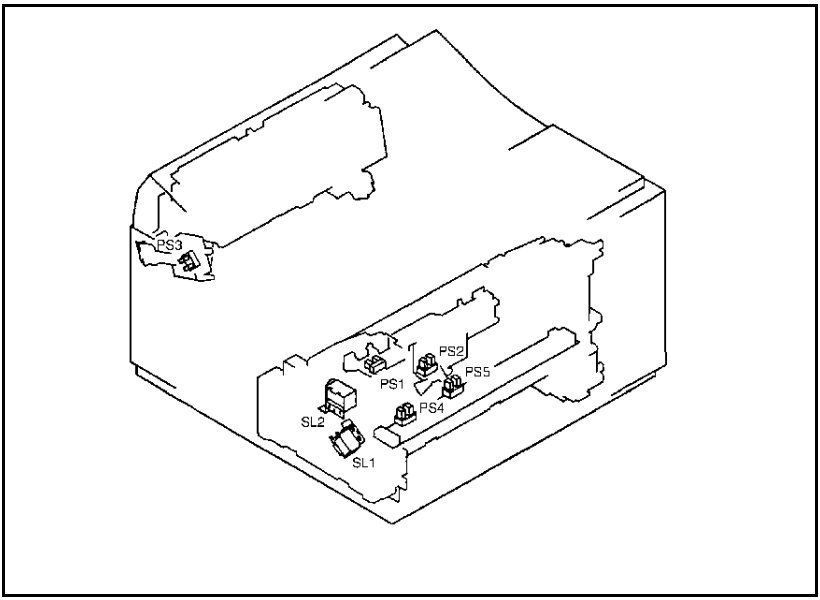

Figure 5-3 **Printer Solenoid and Photosensor Locations**

Photosensors

Photosensors, monitored by the DC Controller, are responsible for detecting the presence of paper, paper motion, and timing. (See Table 5-2.) Photosensor PS2 senses paper in the PC tray; photosensor PS4 senses paper in the MP tray. The message PC LOAD or MP LOAD is displayed when either the PC tray or the MP tray is selected as the primary tray and is out of paper. PS6 and PS7 (respectively) sense the presence of paper in the Lower Cassette and the Envelope Feeder. Paper must be loaded into the primary paper tray before printing can resume. The message PC EMPTY or MP EMPTY is displayed when either the PC tray or the MP tray is out of paper and is not selected as the primary paper tray. LC EMPTY or EE EMPTY is displayed when the Lower Cassette or the Envelope Feeder is empty. The EMPTY message is only a reminder that the paper tray is empty; it is not necessary to load paper to continue printing from another tray.

The Paper Control PCA, Lower Cassette Assembly, and the Envelope Feeder communicate with the DC Controller through serial data lines. The condition of the printer engine photosensors PS2, PS4, PS5, the optional Lower Cassette PS6, and the optional Envelope Feeder PS7 is encoded into a digital logic stream and read by the DC Controller on line SLI.

PS1 detects paper at the Input Feed Roller and is used in jam detection and registration. PS3 detects the presence of paper in the Fuser Assembly, and is used in jam detection. PS5 terminates laser operation when it detects the end of the sheet. This allows the printer to print images on odd-sized media fed from the MP tray without contaminating the Transfer Roller.

Note The LaserJet 5 printer uses different tray designators and associated messages as follows.

LJ 4 / 4 Plus	LJ 5
MP Tray	Tray 1
PC Tray	Tray 2
LC Tray	Tray 3
MP/PC/LC LOAD	TRAY x LOAD (x=1,2, or 3)
MP/PC/LC EMPTY	TRAY x EMPTY (x=1,2, or 3)

Table 5-2 Photosensor Signals

Sensor	Description	PCA
PS1	Input/Registration Sensor - detects paper in pickup area	Paper Control PCA (J605)
PS2	PC tray (Tray 2) Paper-out Sensor - detects the presence of paper in the PC tray.	Paper Control PCA (J605)
PS3	Output/Fuser Exit Sensor - detects paper in fuser.	DC Controller (J208)
PS4	MP Tray (Tray 1) Paper Out Sensor - detects the presence of paper in the MP tray (Tray 1).	Paper Control PCA (J701)
PS5	MP Tray (Tray 1) paper end - detects the trailing edge of paper fed from the MP tray (Tray 1).	Sensor PCA (J702)
PS6	Optional Lower Cassette (LC or Tray 3) Paper-out Sensor - detects the presence of paper in the 500-sheet feeder. See Chapter 8 for location.	Paper Control PCA (J603)
PS7	Optional Envelope Feeder Paper-out Sensor - detects the presence of paper in the envelope feeder. See Chapter 8 for location.	Paper Control PCA (J604)

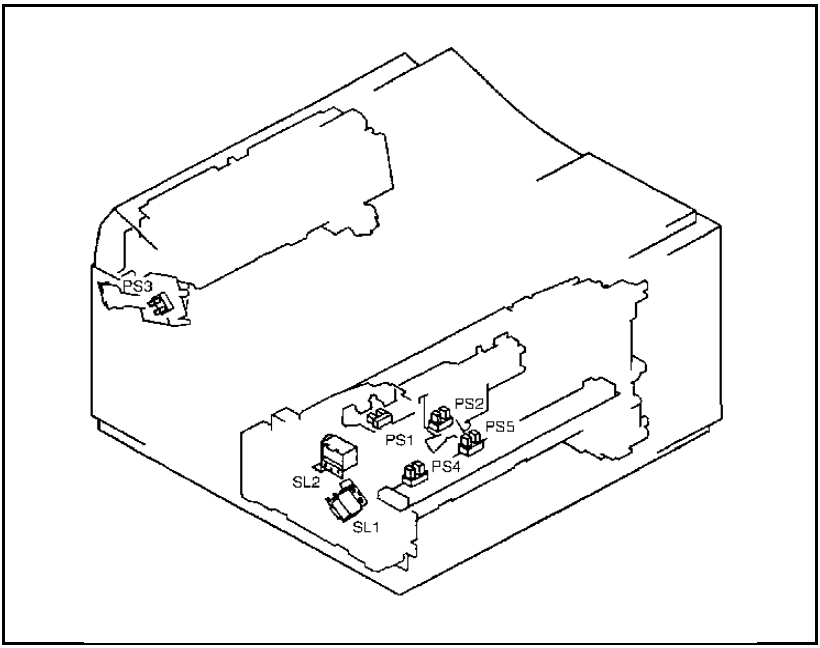

Figure 5-4 **Photosensor Locations**

Microswitches

All microswitch conditions are monitored by the DC Controller over serial data lines SLI and SLO. The State Machines on the individual control PCAs, (for example the Paper Control PCA) convert the switch condition to a digital logic level, and encode that information on the data stream for the DC Controller to use.

SW601 (Door Open Sensing switch) monitors the top cover. If the top cover is open, the printing process stops and the `12 PRINTER OPEN` message is displayed. SW601 disables the +24V (B) voltage, so the printer goes through the warm-up cycle after the cover is closed.

SW602 (Test Print switch) is labeled and located under the MP tray (Tray 1) door on the right edge of the door opening. The Print Engine Test isolates the entire printer from the Formatter PCA. Press the Test Print switch once to start the Print Engine Test. The Print Engine Test is a good method for finding whether print problems are associated with the DC Controller or the Formatter PCA.

Paper tray size microswitches are activated by protrusions on each PC tray (Tray 2). The tray size is determined by the combination of engaged microswitches (see Table 5-3 and 5-4).

SW 603, 604, 605 (Cassette Size Switches) are for the PC tray (Tray 2), and **SW 851, 852, 853** are for the 500-sheet Lower Cassette (Tray 3). These microswitches work together to indicate to the DC Controller which size cassette is installed, or indicate that the cassette is incorrectly installed. The combinations for each cassette size are listed in Table 5-4.

Table 5-3 Microswitch Signals

Switch	Description	PCA
SW601	Door Open Sensing Switches (front and rear)	Paper Control PCA
SW602	Test Print Switch	Paper Control PCA
SW603	PC tray (Tray 2) Size Sensing Switches	Paper Control PCA
SW604	PC tray (Tray 2) Size Sensing Switches	Paper Control PCA
SW605	PC tray (Tray 2) Size Sensing Switches	Paper Control PCA
SW851	Lower Cassette (Tray 3) Size Sensing Switches	Lower Cassette
SW852	Lower Cassette (Tray 3) Size Sensing Switches	Lower Cassette
SW853	Lower Cassette (Tray 3) Size Sensing Switches	Lower Cassette

PC (Tray 2) and LC (Tray 3) Tray Size Sensing System

Trays inserted into the printer trigger specific microswitches, which define the tray size (see Table 5-4). Refer to Figure 7-1 for location.

Table 5-4 Switch Settings for PC (Tray 2) and LC (Tray 3) Trays

Tray Size	SW603 (Upper)	SW604 (Middle)	SW605 (Lower)
Letter	ON	OFF	ON
Legal	ON	ON	OFF
A4	OFF	OFF	ON
Executive	OFF	ON	ON
Tray Not Installed	OFF	OFF	OFF

Motors

The DC Controller controls the Exhaust Fan, the Main Motor, and the Laser/Scanner Motor. The remaining motors and solenoids are controlled by State Machines on the motor's assembly. The condition of these motors and solenoids is monitored by the DC Controller through serial data lines.

The Main Motor (M1) rotates after any printer door is opened and closed, during the Warm-up period, the Initial Rotation period, the Print period, or the Last Rotation Period. The Scanner Motor (M5) is controlled and monitored by the DC Controller PCA. M5 operates during the Initial Rotation period, the Print period, and the Last Rotation period.

The Paper Feed Assembly Drive Motor (M2) runs during the Print Period. This motor provides the drive to pick paper from the PC tray, and deliver it to the Input/Registration Sensor (PS1). The LC Assembly Motor (M3) provides the drive to pick paper from the optional 500-sheet Lower Cassette, and deliver it to the Input/Registration Sensor (PS1). M3 is mounted on the 500-sheet Lower Cassette. The Envelope Feeder Drive Motor (M4) provides the drive to pick envelopes from the envelope feeder and deliver them to the Input/Registration Sensor (PS1). M4 is mounted on the optional Envelope Feeder.

The Exhaust Fan Motor (FM1) is controlled and monitored by the DC Controller PCA. The Exhaust Fan Motor operates at low-speed during the Warm-up period, Standby period, and during PowerSave. It operates at high-speed during the Initial Rotation period, the Print period, and the Last Rotation period.

The Paper Feed Assembly Motor (M2) is controlled by the Paper Control PCA. The Paper Feed Assembly Motor drives the pickup rollers through SL1 and SL2. These rollers pick media from either the PC tray (Tray 2) or the MP tray (Tray 1), and deliver the media to the Paper Registration Sensor (PS1).

Table 5-5 Motors

Motors	Description
M1	Main Motor (Gear Train Drive Motor)
M2	Paper Input Assembly Drive Motor
M3	500-sheet Lower Cassette Pickup Motor
M4	Envelope Feeder Drive Motor
M5	Scanner Motor
FM1	Exhaust Fan Motor

Paper Jam Detection

The Input/Registration Sensor (PS1) and the Paper Exit Sensor (PS3) detect paper moving through the printer. If a paper jam is detected, the DC Controller PCA immediately stops the printing process and `13 PAPER JAM` or `REMOVE PAPER JAM` message is displayed. A paper jam can be detected under any of the following conditions:

- **Input Paper Delay Jam:** When paper does not **reach** the Input Paper Sensor (PS1) within the required time.
- **Input Paper Stationary Jam:** When paper does not **clear** the Input Paper Sensor (PS1) within a specified time.
- **Paper Exit Delay Jam:** When paper does not **reach** the Paper Exit Sensor (PS3) within the required time.
- **Paper Exit Stationary Jam:** When paper does not **clear** the Paper Exit Sensor (PS3) within a specified time.
- **False Paper Jam:** If the Rear Door is open, a paper jam message is displayed because PS3 senses a jam.

Note A defective PS5 (Paper End Sensor) can also cause a paper jam when paper is fed from the MP Tray (Tray 1).

Formatter System

The formatter is responsible for the following:

- Receiving and processing ASCII data from printer interfaces.
- Monitoring front panel input and relaying printer status information (through the front panel and bi-directional I/O).
- Developing/coordinating data placement and timing with the print engine.
- Storing font information.
- Communicating with the host computer.

The Formatter PCA can be divided into three functional areas:

- I/O Control
- Memory/Memory Management
- Data Processing

Formatter Feature	LaserJet 4	LaserJet 4+	LaserJet 5
Processor	20 MHz 80960KA	25 MHz 80960KB	33 MHz 80960JF
REt	Yes	Yes	Yes
MEt	No	Yes	Yes
Economode	No	Yes	Yes
Configurable I/O Buffer Size	No	Yes	Yes
Personality Resource Saving	No	Yes	Yes
PowerSave Mode	No	Yes	Yes
Font Cartridge Slot	Yes	Yes	No
MIO Interface Level	5.0	5.1	6.0
Serial Ports	RS-232/422	RS-232	RS-232 & SIR
Parallel Port	Bitronics	IEEE-1284 Bitronics	IEEE-1284 Bitronics
Maximum RAM (PCL/PS)	34/22 MB	66/50 MB	66/52 MB
SIMM Support	RAM/ROM	RAM/ROM	RAM/ROM/Flash
PCL Level	5	5E	6
On-Board Fonts	35 Intellifont/10 TT Line Printer	35 Intellifont/10 TT Line Printer	45 TT & Dark Courier Line Printer
Default Symbol Set	Roman-8	Roman-8	PC-8
Paper Size Support	Letter/Legal/A4/Exec	Letter/Legal/A4/Exec	Letter/Legal/A4/Exec/A5
MP (Tray 1) Modes	First, Manual, Cassette	First, Manual, Cassette	First, Cassette
Grayscale Hardware Assist	No	No	Yes
ROPS 3 Hardware Assist	No	No	Yes
Intuitive Control Panel	No	No	Yes

I/O Control

The formatter I/O control is responsible for maintaining communications with the host system(s). The printer has three interfaces; serial, parallel (bitronic), and Modular I/O (MIO). The formatter maintains connections with hosts connected to these I/O's including accepting data handshaking, and returning status.

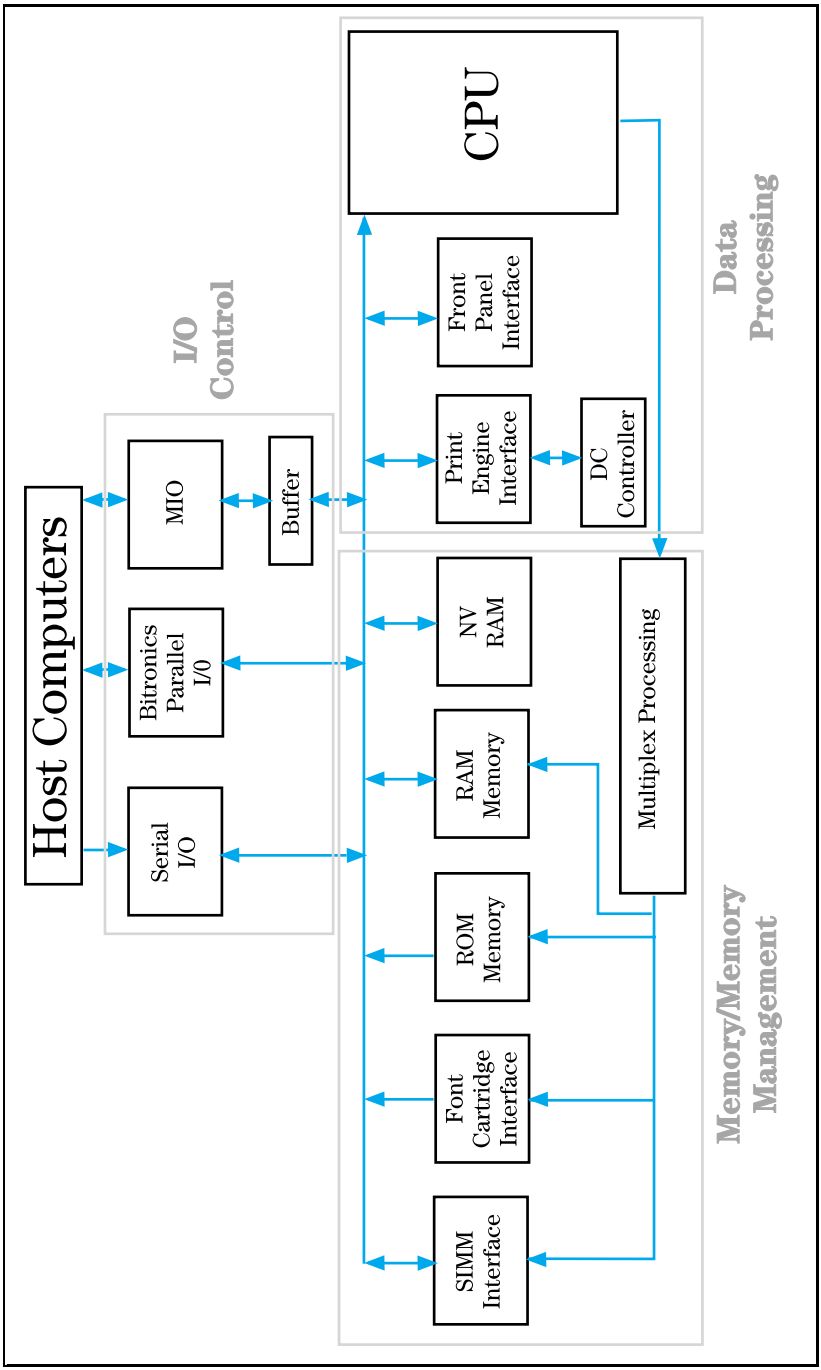

Figure 5-5 Formatter PCA—Functional Areas

Memory Management

The printer uses several different types of memory. This memory can be divided into two different categories, Read Only Memory (ROM) and Random Access Memory (RAM). ROM memory consists of the memory located on the Formatter PCA and any font cartridges that may be installed in the printer. RAM memory consists of RAM memory resident on the Formatter PCA, SIMM memory installed in the printer, and the Non-Volatile Memory (NVRAM) located on the Formatter PCA.

In general, the ROM is responsible for storing the instructions for the operation of the processor and font information. The RAM memory is used to store temporary information that will be used by the printer for a particular print job or a series of print jobs. This could consist of soft fonts, macros or graphics patterns. RAM memory is also used by the printer to store data that is being processed into the raster image that will control the laser and create the printed page.

The NVRAM is used to store printer configuration information that can be input from the printer front panel. This information stored in NVRAM will remain resident in the printer even if the power to the printer is turned off.

Data Processing

The formatter CPU is responsible for the overall control of all functions related to the formatter. One of the CPU's main functions is to maintain communication with the print engine. This is done by the print engine interface and the DC Controller PCA. The DC Controller PCA monitors all print engine functions such as fuser temperature and paper jam status. The print engine status is communicated by the DC Controller to the formatter CPU by the print engine interface. The CPU also controls the process that converts ASCII data received from the host into the raster data. This raster data is sent to the laser scanner assembly via the DC Controller.

Finally the CPU comunicates printer status to the user through the control panel via the front panel interface. The front panel interface also transmits front panel inputs to the CPU.

PJL Overview

Printer Job Language (PJL) is an integral part of configuration, in addition to the standard Printer Command Language. With standard I/O cabling, PJL allows the printer to perform functions such as:

- Allowing the printer to talk to the host computer through a Bi-directional parallel connection. The printer can tell the host such things as the control panel settings, and allow the control panel settings to be set from the host.
- Dynamic I/O switching allows the printer to be configured with a host on each I/O. The printer can receive data from any I/O simultaneously.
- Context-sensitive switching allows the printer to recognize automatically the personalities (PostScript or PCL) of each host and configure itself to serve that personality.
- PJL can act as a spooler to print only sections of a print job as defined from the software.
- PJL allows any print job to be protected from the effects of the previous print job. If a print job is sent to the printer in landscape mode, the subsequent print jobs print in landscape only if they are formatted for landscape printing.

Image Formation System

Laser printing requires the interaction of several different technologies (such as electronics, optics, and electro-photographics) to provide a printed page. Each process functions independently and must be coordinated with all other printer processes. The image formation process centers around the photosensitive drum and consists of six stages:

1. Cleaning
2. Conditioning
3. Writing
4. Developing
5. Transferring
6. Fusing

The toner cartridge houses the cleaning, conditioning, and developing stages of the electro-photographic (EP) process. Components of the image formation system that wear, degrade, or are consumed are built into the replaceable cartridge. The toner cartridge contains the photosensitive drum, primary charging roller, developing station, toner cavity, and cleaning station. This eliminates the need for a service call when replacement is required.

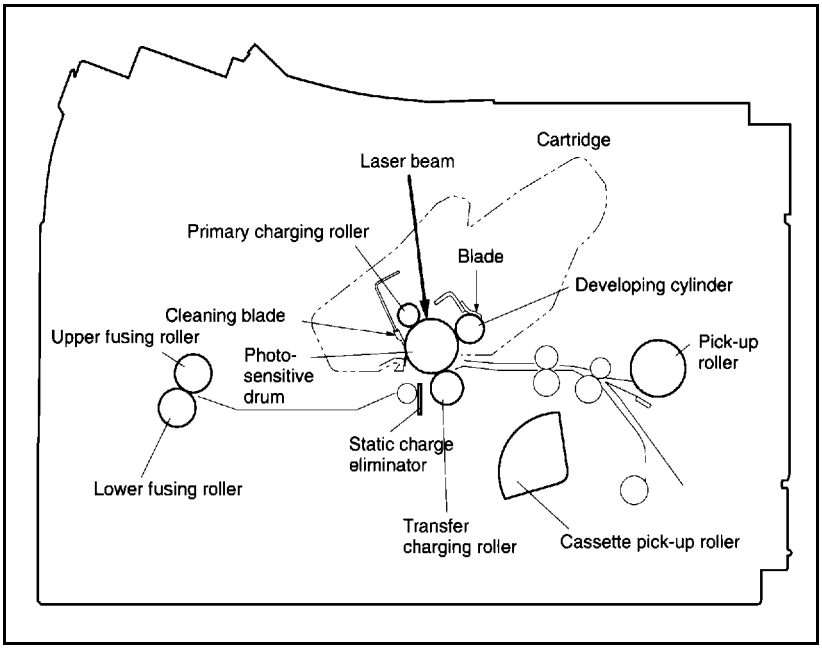

Figure 5-6 Image Formation System

Photosensitive Drum

The photosensitive drum is the “heart” of the Image Formation System. The special properties of this drum allow an image to be formed on the drum’s surface and then transferred to paper. The drum is an extruded aluminum cylinder. The outside of the cylinder is coated with a layer of organic-photoconductive material (OPC) which is non-toxic. The aluminum base of the photosensitive drum is electrically connected to ground potential (see Figure 5-7).

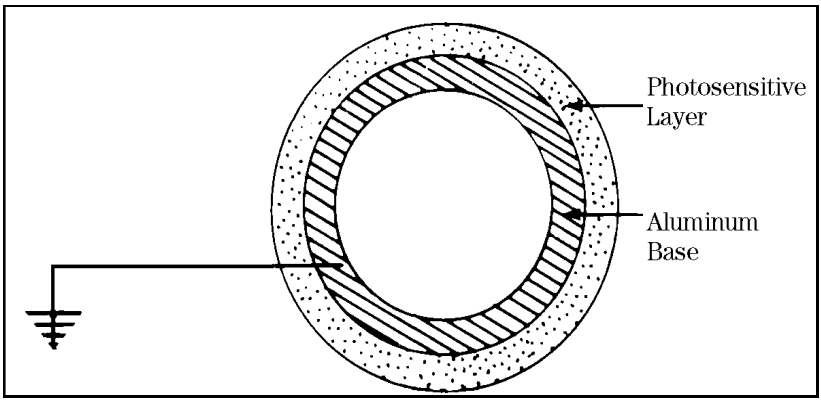

Figure 5-7 Photosensitive Drum

Drum Sensitivity

The OPC material has properties similar to a photo-resistor. It becomes electrically conductive when exposed to light. When the photosensitive drum is exposed to light, the negative charges deposited on it are conducted to the ground potential of the drum’s base. Areas not exposed to light remain nonconductive and maintain their negative charge.

Caution Do not expose the Toner Cartridge to any bright light source. Too much light permanently damages the drum.

Cleaning Stage

During the cleaning stage of the image formation process, the drum's surface is physically cleaned, preparing it to hold an image. During printing, the drum is rotating constantly making several complete rotations per printed page. Before forming the image for a given section of print, a cleaning blade removes toner from the previous rotation of the drum. The excess toner is stored in the toner cartridge where it is prevented from being used in later print jobs.

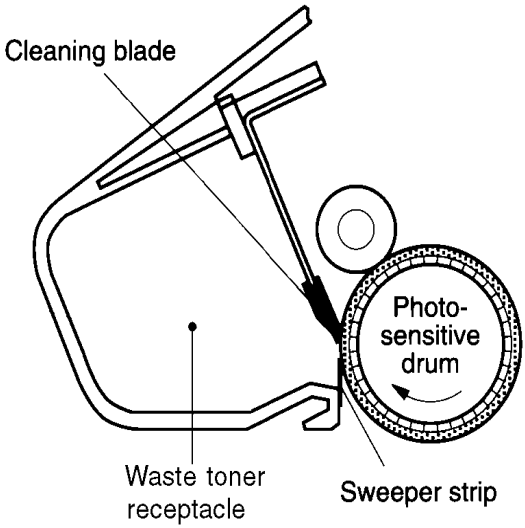

Figure 5-8 Drum Cleaning Station

Conditioning Stage

After the drum is physically cleaned, it must be conditioned. This process consists of applying a uniform negative charge on the surface of the drum with the primary charging roller, located in the toner cartridge. The primary charging roller is coated with conductive rubber with an AC bias applied to erase any residual charges and maintain a constant drum surface potential. In addition, a negative DC bias is applied by the charging roller to create a uniform negative potential on the drum's surface. The amount of DC voltage is modified by the print density setting from the Control Panel.

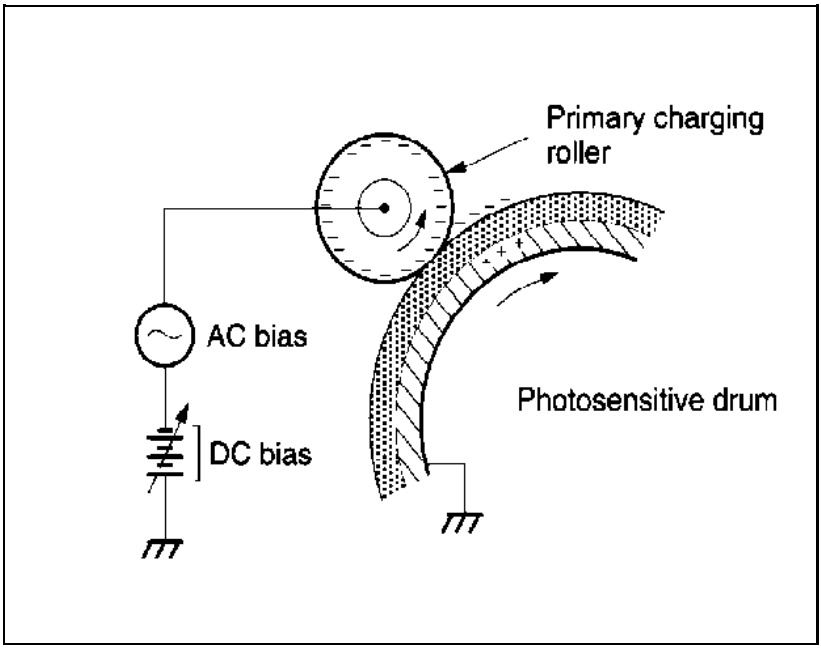

Figure 5-9 Primary Charging Roller

Writing Stage

At the writing station, the laser beam is used to discharge the drum's negative potential by focusing laser light onto areas of the photosensitive drum. This creates a latent electrostatic image, which later is developed into a visible image.

Laser light is produced by a small modulated laser diode. The beam created by the diode shines onto a rotating polygonal mirror. As the mirror rotates, the beam reflects off the mirror and sweeps the page from left to right (see Figure 5-10).

A set of lenses and mirrors focuses the horizontal sweeping beam through the laser beam access slot in the rear of the toner cartridge, and onto the photosensitive drum. Because the beam is sweeping the entire length of the drum and the drum is rotating, the entire circumference of the drum can be covered. The speed of the scanner motor (which turns the scanning mirror) and the speed of the main motor (which turns the drum) are synchronized, and each successive sweep of the beam is offset 1/600th of an inch. The beam can be turned on and off to place a dot of light every 1/600th of an inch in the horizontal direction. This is how the printer achieves its 600 x 600 DPI resolution.

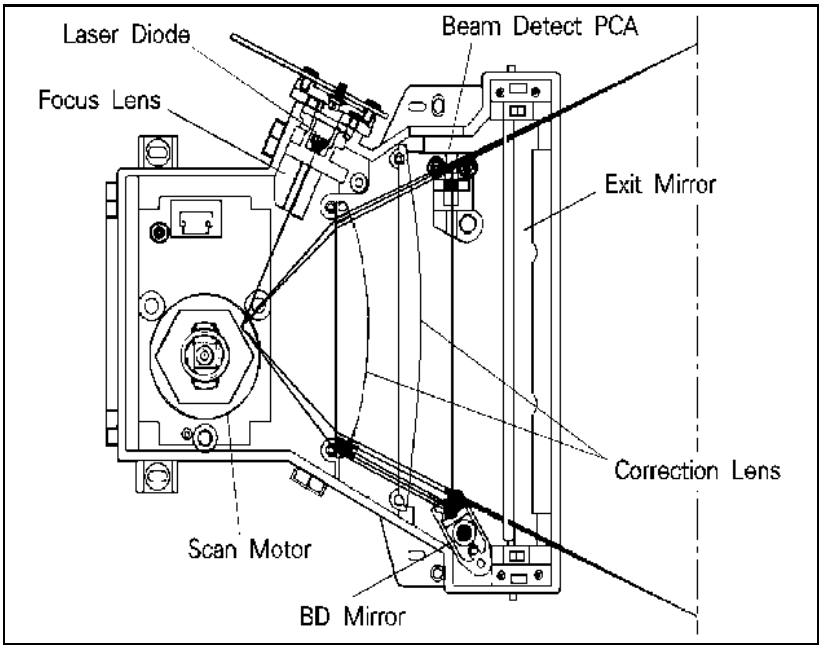

Figure 5-10 Image Writing

At the beginning of each sweep (before the beam reaches the drum), the beam is reflected off the beam detect mirror. The momentary pulse of light is sent to the DC Controller, where it is converted to an electrical signal used to synchronize the output of data (VDO) for one sweep (scan line). This pulse, referred to as the Beam Detect signal (BD), is used to diagnose problems with the laser diode or scanner motor also.

After the writing station, the drum surface has an invisible (latent) electrostatic image. Portions of the drum not exposed to the laser are still at the uniform negative potential (placed there by the primary charging roller), but those portions exposed to light have been discharged to ground, to form the latent electrostatic image.

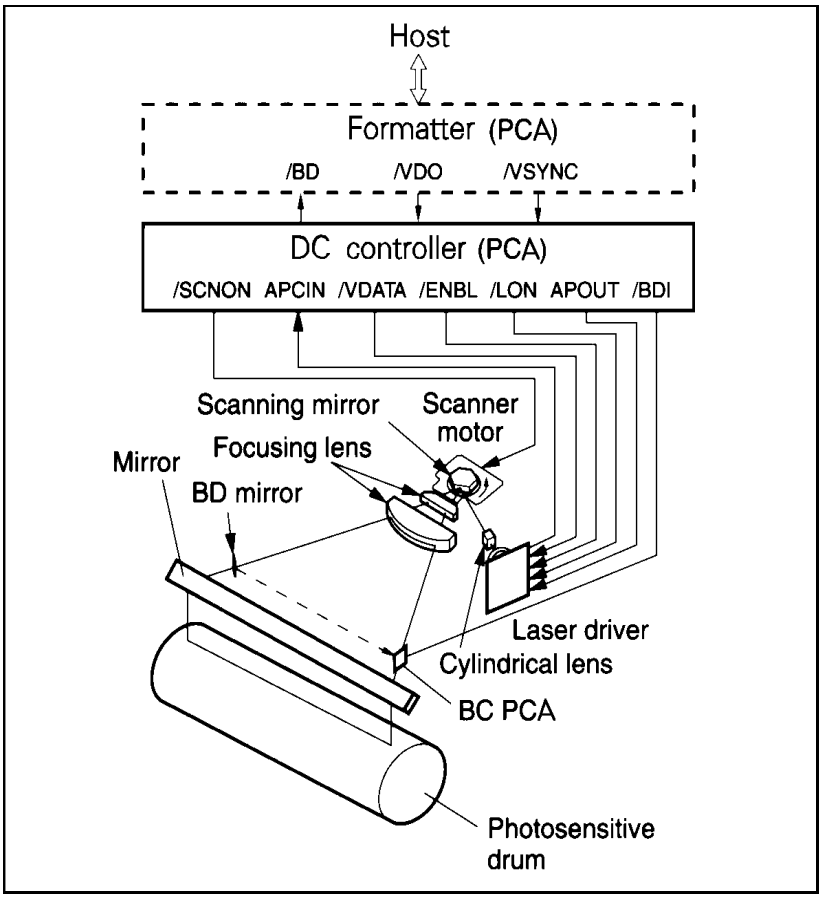

Figure 5-11 Drum Signals

Developing Stage

The developing station develops the latent electrostatic image into a visible image on the drum. The developing unit consists of a metallic cylinder that rotates around a fixed magnetic core inside the toner cavity. Toner is a powdery substance made of black plastic resin bound to iron particles, which is attracted to the magnetic core of the cylinder. A rubber blade “brushes” the toner on the developing cylinder to a uniform thickness.

The toner particles obtain a negative surface charge by rubbing against the developing cylinder which is connected to a negative DC supply. The negatively charged toner is attracted to the discharged (grounded) areas of the drum exposed to laser light, and repelled from the negatively charged (non-exposed) areas. An AC potential is applied to the developing cylinder to decrease the attraction between the toner and the magnetic core of the cylinder, and to increase the repelling action of toner against the areas of the drum not exposed to laser light. This AC potential improves density and contrast.

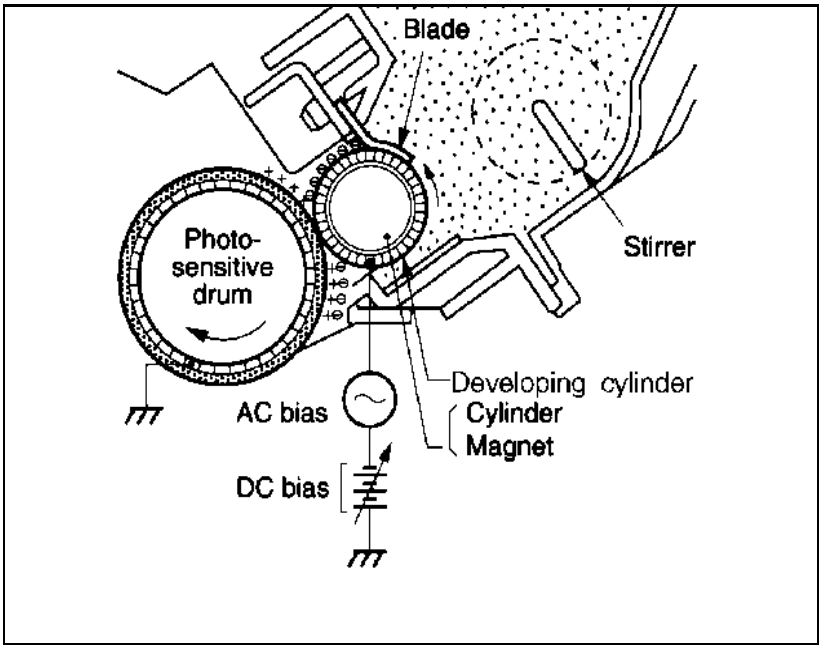

Figure 5-12 Image Development

The DC bias of the developing cylinder is adjusted to change the force of attraction between the toner and drum by changing the print density setting from the control panel. A change in DC bias causes either more or less toner to be attracted to the drum, which in turn either increases or decreases the print density. The print density variation is approximately ±10% (see Figure 5-13). Both the primary and developer DC bias voltages are changed in response to the density setting.

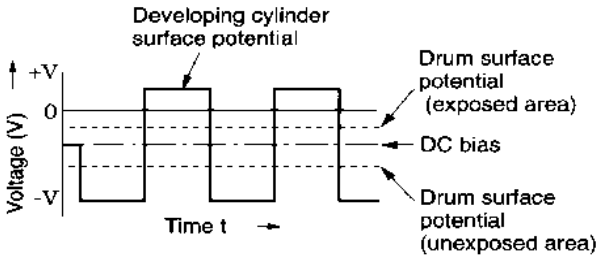

Figure 5-13 Developing Potentials

Transferring Stage

At the transferring station, the toner image on the drum's surface is transferred to the paper. A positive charge applied to the back of the paper by the transfer roller causes the negatively charged toner on the drum's surface to be attracted to the page.

The small radius of the drum and the stiffness of the paper peel the paper away from the drum. The static charge eliminator also helps separate the paper from the drum. The static charge eliminator weakens the attractive forces between the negatively charged drum surface and the positively charged paper. Without this help, thin paper can wrap around the drum. After separation, the paper moves to the fusing station and the drum rotates to the cleaning and conditioning stations.

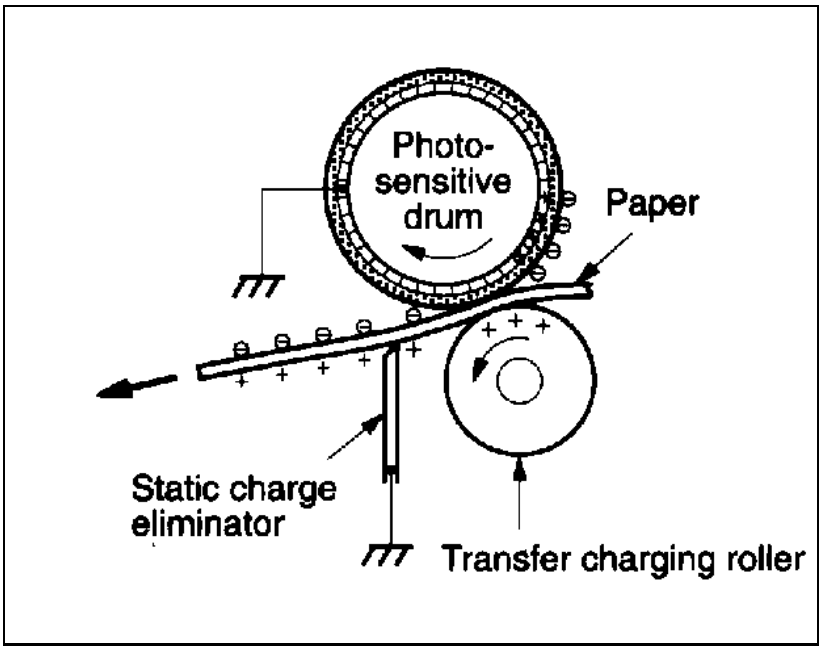

Figure 5-14 Transfer of the Toner Image and Paper Separation

Fusing Stage

At the fusing station, the toner is fused into the paper by heat and pressure to produce a permanent image. The paper passes between a heated fusing roller and a soft pressure roller. This melts the toner and presses it into the paper. To keep the toner or paper from sticking, the upper fusing roller is covered with a non-stick, “Teflon-type” sleeve. The fusing roller contains an halogen quartz lamp that provides heat for the fusing process.

The fusing roller temperature is monitored by the DC Controller PCA, using a thermistor (TH1). The DC Controller maintains a temperature of about 172° C during standby mode and 183° C during print mode. If the fusing system overheats (exceeds 230° C), a thermoswitch opens the power circuit to the fusing heat lamp, and a `50 SERVICE` message is displayed.

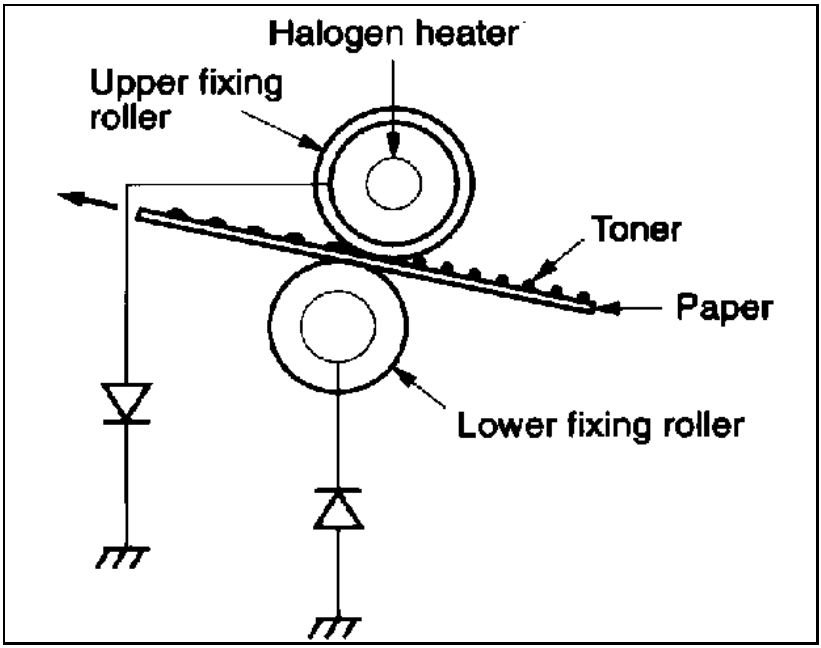

Figure 5-15 Fusing the Toner to the Paper

Paper Feed System

Note The LJ 5 printer designators differ as follows.

LJ 4 / 4 Plus	Multipurpose (MP) Tray	Paper Cassette (PC) Tray	Lower Cassette (LC) Tray
LJ 5	Tray 1	Tray 2	Tray 3

The following paper paths are described in this section of the manual:

- **PC Tray (Tray 2) to Output Trays**
- **MP Tray (Tray 1) to Output Trays**

The paper feed system is responsible for picking paper from either the PC tray (Tray 2) or MP tray (Tray 1) and delivering it to the image formation system, feeding it into the fusing station, and delivering the paper to the output tray (see Figure 5-16).

The Paper Feed Assembly is a modular, replaceable paper-feeder mechanism which allows media to be input from either of four sources. The four paper input sources of the printer are:

- The MP Tray (Tray 1)
- The PC Tray (Tray 2)
- The Lower Cassette (Tray 3)
- The Envelope Feeder

Each input has features which makes it the best choice for various applications. For instance, short media and heavy stock can be fed from the MP tray (Tray 1) because it senses media length and has a relatively straight paper path. Large print jobs can be fed reliably from the optional Lower Cassette (Tray 3).

The Paper Feed Assembly contains a state machine which monitors input sensors and generates commands for the solenoids and motors on the Paper Feed Assembly. In addition, the Paper Feed Assembly communicates with the DC Controller through serial data lines. An illustration of this is M2, the Paper Feed Motor. M2 is controlled solely by the Paper Feed Assembly state machine. M2 begins rotation when the State Machine receives the correct set of conditions from its inputs and the serial data lines. M2 stops rotation when the Input Registration sensor (PS1) reports the presence of paper to the State Machine. The State Machine outputs the presence of paper to the DC Controller through the serial data line.

The Paper Feed Assembly performs horizontal registration of the print media through the Oblique Rollers. As the print media passes through the Oblique Rollers, the media is moved uniformly to the left side of the print path. The movement ensures that each print image is oriented properly on the horizontal axis.

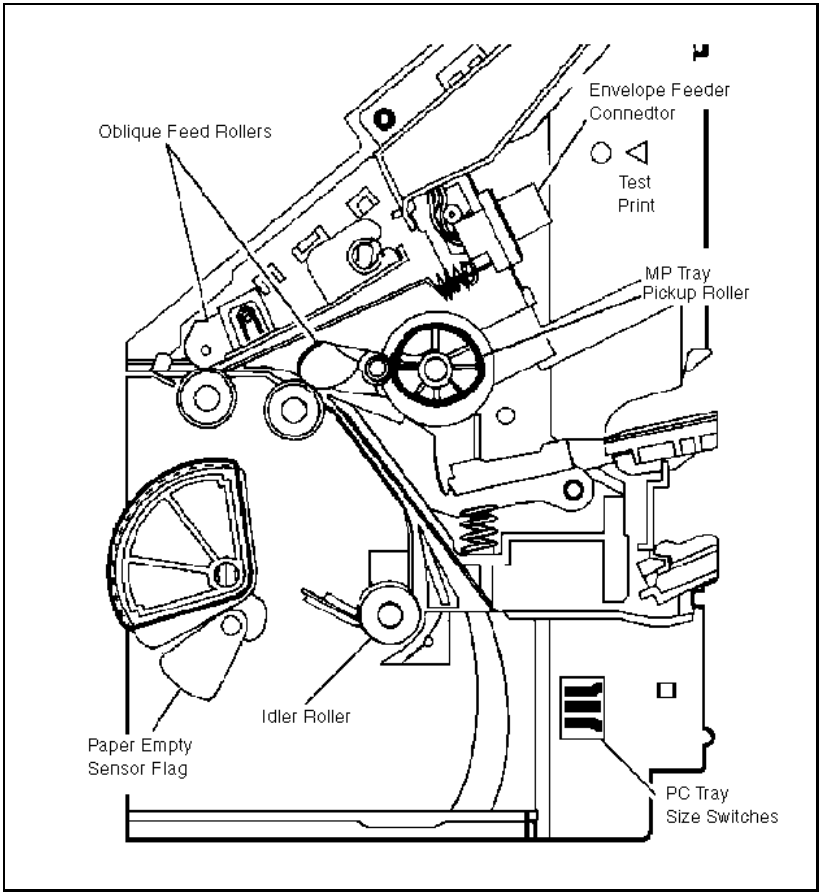

Figure 5-16 Input Paper Feed System Diagram

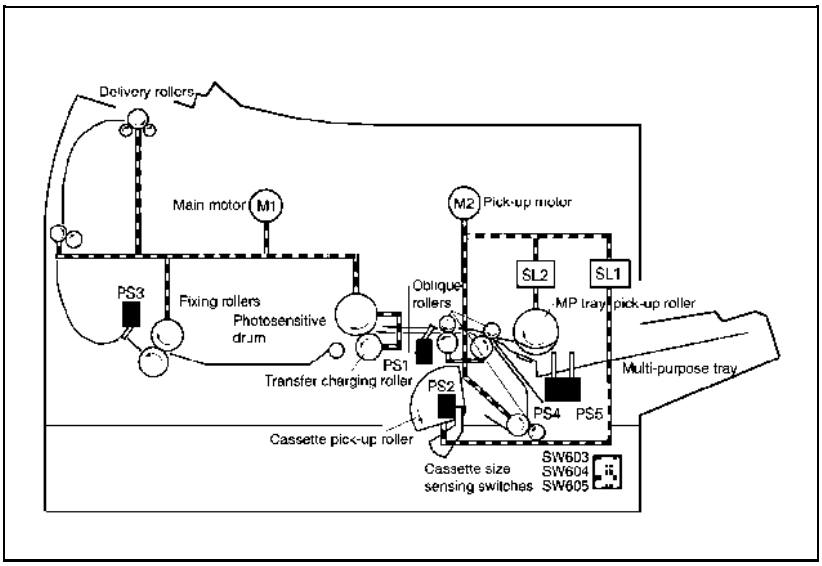

Figure 5-17 Paper Feed Assembly (Sectional View)

Table 5-6

Part	Description
PS1	Leading Edge Registration Sensor
PS2	PC Tray (Tray 2) Paper Out Sensor
PS3	Exit Sensor
PS4	MP Tray (Tray 1) Paper Out Sensor
PS5	MP Tray (Tray 1) Paper End Sensor
SL1	Cassette (Tray 2) Pickup Roller Clutch Solenoid
SL2	MP (Tray 1) Tray Pickup Roller Clutch Solenoid

Printing from the MP Tray (Tray 1)

MP tray selection is provided by the Formatter PCA, as configured by the operator's control panel or by a software application. The MP tray (Tray 1) feed system's paper motion begins when the DC Controller PCA, after receiving a PRNT signal, starts the Scanner Motor (M5) and the Main Motor (M1). When the fusing roller reaches the minimum operating temperature (183° C), the MP pickup roller clutch solenoid (SL2) is energized for 1 second, allowing the MP pickup roller to make one rotation. Clutches and solenoids work together to start and stop gears and rollers used for paper movement. The MP pickup roller then feeds a sheet of paper from the MP tray (Tray 1).

The Formatter PCA sends the $\overline{\text{VDO}}$ signal to the print engine within a specific time period after the paper reaches the Input/Registration Paper Sensor (PS1). This aligns the leading edge of the toner image on the photosensitive drum with the leading edge of the paper. After the paper passes the drum and the fusing rollers, it triggers the Paper Exit Sensor (PS3). The paper then is directed to the output tray.

If the paper does not reach or clear each sensor within a specified time, the microprocessor on the DC Controller PCA assumes a paper jam occurred and informs the Formatter PCA.

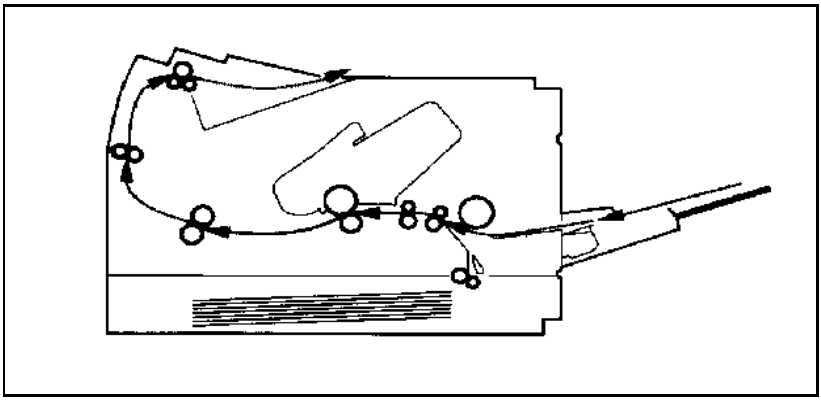

Figure 5-18 MP Tray (Tray 1) to Output Tray Paper Path

Printing from the PC Tray (Tray 2)

PC tray selection is provided by the Formatter PCA, as configured by the control panel or by software. When the DC Controller PCA receives a $\overline{\text{PRNT}}$ signal, it starts the Scanner Motor (M5) and the Main Motor (M1). When the fusing roller reaches the minimum operating temperature (approximately 183° C), the PC tray (Tray 2) pickup roller clutch solenoid (SL1) is energized for 1 second, allowing the roller to make one rotation. The PC tray pickup roller then feeds a sheet of paper from the PC tray into the PC tray input feed rollers. The PC tray input feed rollers turn until paper reaches the Input/Registration Sensor (PS1). When the media is sensed at (PS1), the pickup motor (M2) stops and the paper is carried through the remainder of the print path by the Main Motor (M1).

The Formatter PCA sends the $\overline{\text{VDO}}$ signal to the print engine after the paper reaches the Input Paper Sensor (PS1). This aligns the leading edge of the toner image on the photosensitive drum with the leading edge of the paper. After the paper passes the drum and the fusing rollers, it triggers the Paper Exit Sensor (PS3). The paper is then fed into the output tray.

If the paper does not reach or clear each sensor within a specified time, the microprocessor on the DC Controller PCA assumes a paper jam occurred and informs the Formatter PCA.

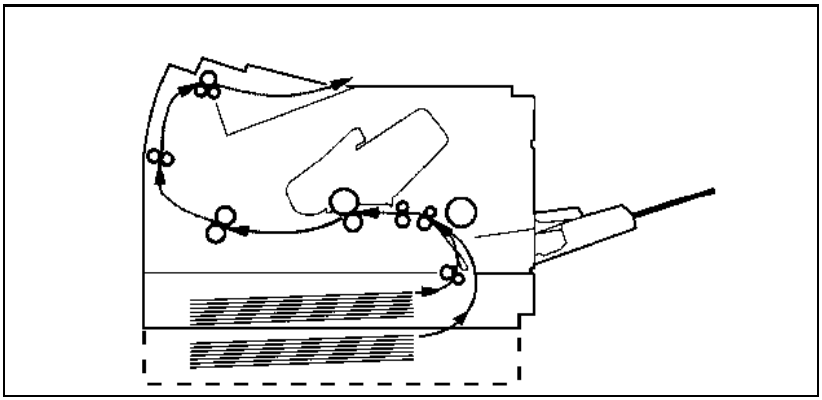

Figure 5-19 PC Tray (Tray 2) and LC Tray (Tray 3) to Output Tray Paper Path

Power System

When the main power switch is turned ON, the AC Power Supply provides AC voltage to the DC Power Supply and the fuser assembly heat lamp. The paper path doors must be closed to activate the AC power supply door switches before voltage is provided to the heat lamp.

The DC Power Supply generates +5V DC, and +24V DC for use by the Formatter PCA and the DC Controller PCA. The DC Controller PCA distributes voltages to the remaining electrical assemblies. Over-current protection for the DC Power Supply is provided by a current monitoring circuit (crowbar circuit). To reset the crowbar circuit, the printer's power must be turned OFF for at least ten minutes. The power system block diagram is illustrated in Figure 5-20.

Note that both AC and DC power supplies are contained within the Power Supply Assembly. The high voltage power supply is a discrete assembly located on the underside of the printer.

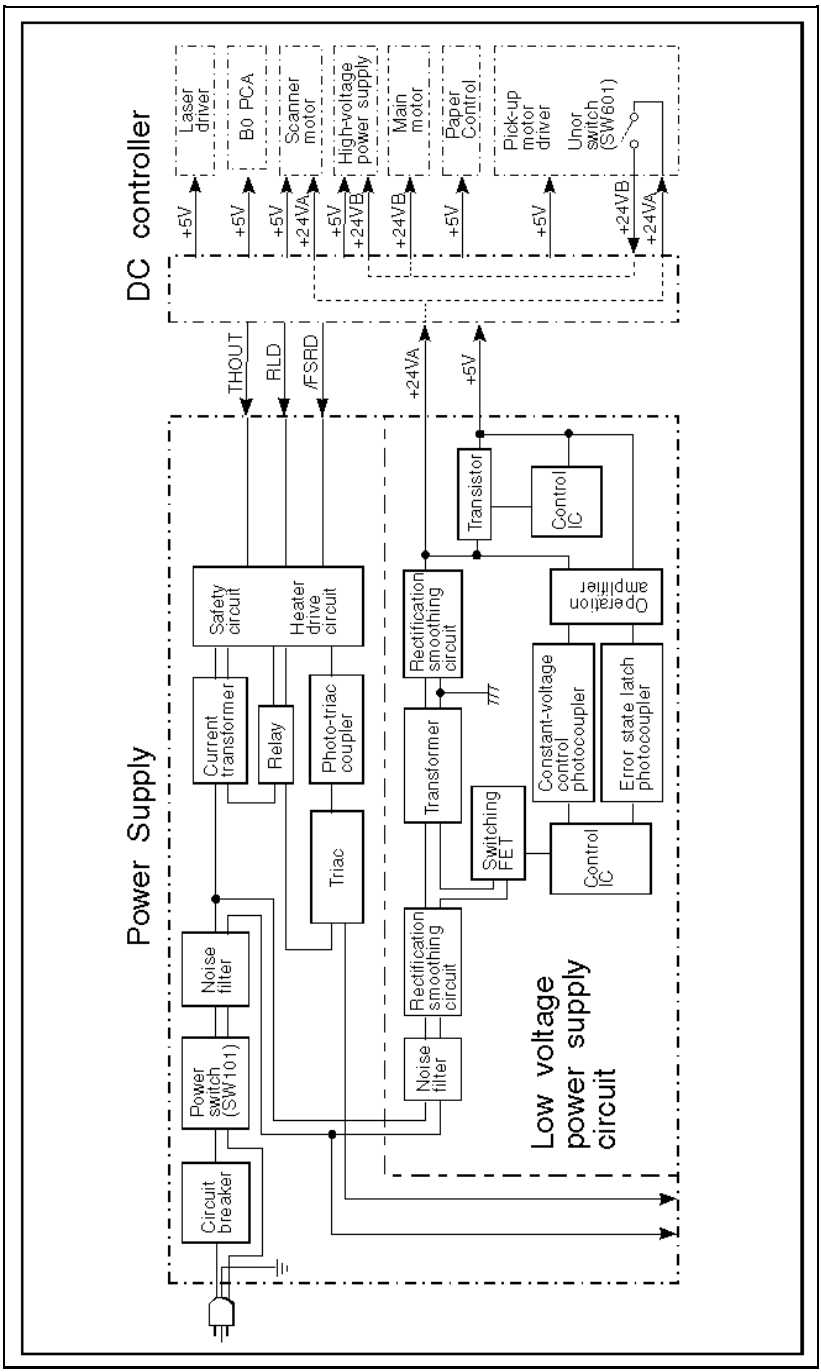

Figure 5-20 Power System Block Diagram

Basic Sequence of Operation

The Formatter PCA and the DC Controller PCA share information during printer operation. Connector J7 on the formatter and connector J207 on the DC controller form a link which operates as a serial data bus. This allows printer status, command information, and dot-image data to be passed between both controllers.

Standard Printer Operation

The following events take place during normal printer operation:

1. After the printer's power is turned ON, the printer enters the Warmup period.
2. After the printer completes the Warmup period and is ready for operation, the DC controller sends a READY signal ($\overline{\text{RDY}}$) to the formatter.
3. After the $\overline{\text{RDY}}$ signal is true and print data is ready to be transmitted, the formatter sends a PRINT signal ($\overline{\text{PRNT}}$) to the DC controller.
4. After the DC controller receives the $\overline{\text{PRNT}}$ signal, the Initial Rotation period begins.
5. At the end of the Initial Rotation period, the DC controller sends a TOP OF PRINT signal ($\overline{\text{TOP}}$) synchronized with a BEAM DETECT signal ($\overline{\text{BD}}$) to the formatter. This initiates the Print period.

6 Each time the formatter receives a synchronized $\overline{BD}$ signal from the DC controller, the formatter sends a VIDEO data stream ($\overline{VDO}$) to the DC controller.
7 After the DC controller receives the $\overline{VDO}$ data, the DC controller translates it into a VIDEO OUT signal (VDOUT) that switches the laser diode ON and OFF.
8 The laser beam, created by the laser diode, reflects off the scanner mirror onto the photosensitive drum to form a latent electrostatic image, writing a single line of print (dot) data.
9 After the last VDO line of dot data is sent from the formatter, the DC controller checks for another $\overline{PRNT}$ signal from the formatter.
10 *If* another $\overline{PRNT}$ signal is detected, the Print period continues with another page.
11 *If* the DC controller fails to receive a $\overline{PRNT}$ signal before the end of the page passes over the Input/Registration Sensor (PS1), the DC controller initiates the Last Rotation period.

If the printer fails to perform correctly, the DC controller sends an appropriate status to the formatter PCA, and an error is displayed on the printer's control panel.

Timing Diagrams

The following timing diagram describes the operation of the printers. The "MP Tray Timing Diagram" was developed by running two consecutive prints on A4 paper.

This a 2 panel pull-out.

Figure 5-21 MP Tray Timing Diagram—HP LaserJet 4/4M

This a 2 panel pull-out.

Figure 5-22 MP (Tray 1) Timing Diagram—HP LaserJet 4 Plus/4M Plus/5/5M/5N

Warmup Period

The Warmup period begins when the printer's power is turned ON, and ends when the fusing roller temperature reaches 172° C. When the printer is switched ON, the exhaust fan (FM1) begins low-speed rotation and the fusing roller maintains 172° C. The DC controller then switches the main motor (M1) ON, and applies AC high voltage to the primary charging roller to remove any residual charge from the photosensitive drum. Negative high voltage is applied to the transfer roller to clean toner build-up from the roller. When the fusing roller reaches 172° C, the main motor, and AC high voltage, are turned OFF.

After the power is switched on, the Main Motor (M1) and the pickup motor (M2) turn for approximately 4 seconds to clear the paper path. The motors stop rotation when the fuser reaches 172° C.

After the printer warms up, the message `00 READY` is displayed, the printer goes "on-line," and the control panel keys become operational.

Standby Period

When the Warmup period is completed, the message `00 READY` is displayed. At this point the printer is in the Standby period. This indicates that the printer is ready for printing. The fusing roller remains at a constant temperature of 172° C, and the exhaust fan continues operating at low-speed rotation.

PowerSave

When the printer enters PowerSave mode, fuser current is shut down, allowing the fuser to cool to room temperature without posting a `50 SERVICE` error. The exhaust fan continues to operate at low speed.

Initial Rotation Period

When the DC controller receives a PRINT signal ($\overline{\text{PRNT}}$) from the formatter, the DC controller allows the fusing roller to begin warming up to approximately 183° C, and starts the main motor (M1), the pickup motor (M2), and scanner motor (M5). Next, the laser diode turns ON and generates a sweep beam used to adjust the laser power (APCIN). After the DC controller receives a BEAM DETECT signal ($\overline{\text{BD}}$) initiated by the sweep beam, the laser power stabilizes and the sweep beam turns OFF.

The DC controller then turns ON the main motor, switches the exhaust fan to high-speed rotation, applies AC high voltage and negative DC high voltage to the primary charging roller, and applies negative high voltage to the transfer roller to help remove excess toner.

The developing bias (a negative AC/DC voltage) is applied to the developing roller 1.16 seconds after the main motor is turned ON, then positive high voltage is applied to the transfer roller 2.0 seconds after the main motor is turned ON.

When the fusing roller temperature reaches 183°, the MP (Tray 1) pickup roller clutch solenoid (SL2) energizes and paper is fed from the tray. If paper feeds from the PC tray (Tray 2), roughly 10 seconds after Initial Rotation begins, the PC tray (Tray 2) pickup roller clutch solenoid (SL1) energizes.

If a failure occurs during this period, the following errors may be displayed:

50 SERVICE	This error occurs when the fusing roller fails to reach the correct temperature in the required time (see "50 SERVICE") in Chapter 7).
51 ERROR	This error occurs when the $\overline{BD}$ signal is not received by the DC controller, (see "51 ERROR BEAM DETECT)" in Chapter 7).
52 ERROR	This error occurs when the scanner motor fails (see "52 ERROR," Chapter 7).

Print Period

When the leading edge of the paper activates the input/registration sensor (PS1), the DC controller forces the laser diode ON until a BD signal is received. Next, the DC controller receives a VIDEO data stream (VDO) from the formatter. The DC controller translates the VDO data into a VIDEO OUT signal (VDOUT), which modulates the laser diode ON and OFF, creating intermittent bursts of laser light which reflect off the scanner mirror and onto the photosensitive drum to form a latent electrostatic image. VDO data is sent from the formatter for each scan line of print data on a page, and a BD signal must precede each VDOUT line data received by the DC controller.

When the paper exit sensor (PS3) is activated by the leading edge of the first page, the DC controller allows the Fusing Roller to warmup to 183° C. After the last VDO data is sent for the last line of print data on the first page, the formatter sends a PRNT signal for the second page.

About 1.87 seconds after the first VDO signal is sent from the formatter, the High Voltage PCA applies positive high voltage to the transfer roller.

When the DC controller identifies the last line of print data on the first page, the laser diode is forced ON and generates a sweep beam used to adjust the laser power. After the DC controller receives a BEAM DETECT signal (BD) initiated by the sweep beam, the laser power stabilizes and the sweep beam turns OFF. The DC controller then searches for a PRNT signal to begin the second page.

When the DC controller receives the next PRNT signal from the formatter, the DC controller anticipates receiving a BD signal and energizes the pickup roller clutch solenoid (PC tray-SL1, MP tray-SL2, or lower cassette SL3) about 1.0 second before it receives the BD signal, and the second page feeds from the paper tray. Until the DC controller receives the expected BD signal, a nominal positive voltage is applied to the transfer roller to prevent toner build-up while the transfer Roller is in direct contact with the drum.

The formatter then sends $\overline{\text{VDO}}$ data to the DC controller. The DC controller translates the $\overline{\text{VDO}}$ signal into a VIDEO OUT signal (VDOUT), which modulates the laser diode ON and OFF, creating intermittent bursts of laser light that are reflected off the scanner mirror and onto the photosensitive drum to form a latent electrostatic image. Upon receipt of a BD signal from the DC controller, $\overline{\text{VDO}}$ data is sent from the formatter for each scan line of print data on a page.

Before the next sheet of paper arrives, the voltage on the transfer roller switches from the nominal standby voltage to a positive high voltage, to prepare to transfer the toner image from the drum to the paper. The process repeats for each successive page as necessary.

If a failure occurs during this period, the following errors may be displayed:

41 ERROR	This error occurs when a sheet of paper is fed too soon or when an unstable $\overline{\text{BD}}$ or $\overline{\text{TOP}}$ signal is received (see "41.x ERROR" message in Chapter 7).
50 SERVICE	This error occurs when the fusing roller fails to rise to the correct temperature in the required time (see "50 SERVICE") in Chapter 7).
51 ERROR	This error occurs when the $\overline{\text{BD}}$ signal is not received by the DC controller (see "51 ERROR" in Chapter 7).
52 ERROR	This error occurs when the scanner motor fails (see "52 ERROR" in Chapter 7).

Last Rotation Period

After printing is complete, the Last Rotation period begins, during which residual static charges are eliminated from the photosensitive drum to prepare for the next printed page.

About 1.7 seconds after the Last Rotation period begins, a nominal standby voltage is applied to the transfer roller to stop the toner attraction. Then, 4.0 seconds after the Last Rotation period begins, the negative DC high voltage on the primary charging roller is turned OFF, leaving the AC voltage to neutralize the drum's surface. Finally 5.98 seconds after beginning the Last Rotation period, the transfer roller voltage returns to a negative high voltage, and any toner on the surface of the transfer roller is attracted to the photosensitive drum.

At the end of the Last Rotation period, the fusing roller returns to 172° C, the main motor turns OFF, the scanner motor turns OFF, the AC high voltage to the primary charging roller turns OFF, the transfer roller voltage returns to 0 volts, and the printer returns to the Standby period. About 30 seconds after the printer returns to the Standby period, the exhaust fan switches to low-speed rotation.

When another $\overline{\text{PRNT}}$ signal is sent from the formatter, printer operation resumes.

6

Removal and Replacement

This chapter describes the complete disassembly of the printer from the beginning. In every instance, tasks that must be performed before beginning the procedure are listed first. Remove the assemblies in the order listed to prevent damage during re-assembly.

Removal and replacement of user-replaceable maintenance items is shown in Chapter 4, “Preventive Maintenance.” These items include:

- All Pickup Rollers and Separation Pad
- Transfer Roller Replacement
- Installing the Toner Cartridge

Servicing the printer involves replacing printed circuit and electro-mechanical assemblies. Do not repair component failures within these assemblies. In all instances, replace the failed assembly.

The assembly procedure is the reverse of the removal procedure, except where specific instructions are provided.

Caution

Power-off the printer and disconnect the power cord from the power outlet and the printer before servicing the printer.

Some sheet metal edges, particularly around the formatter cage, are sharp. Be careful when working in these areas to avoid being cut.

Note

The printer contains parts that are sensitive to Electrostatic-Static Discharge (ESD). Always observe proper ESD procedures when servicing the printer. **This symbol: ESD appears in this chapter when the parts being serviced are especially susceptible to ESD damage.**

Required Tools

Table 6-1 Required Tools

QTY	TOOL
1	#2 Magnetized Phillips Screwdriver (6-inch shaft)
1	Small Needle Nose Pliers
1	Small Flat-head Screwdriver (6-inch shaft)
1	5mm Nut driver

Hardware Review

All screws used in the printer are Phillips head, which require a Phillips screwdriver. Figure 6-1 shows the difference between a Phillips and a Pozidriv screwdriver. Note that the Phillips tip has more beveled surfaces.

Caution Use of a Pozidriv screwdriver will damage the screw heads. Use Phillips only.

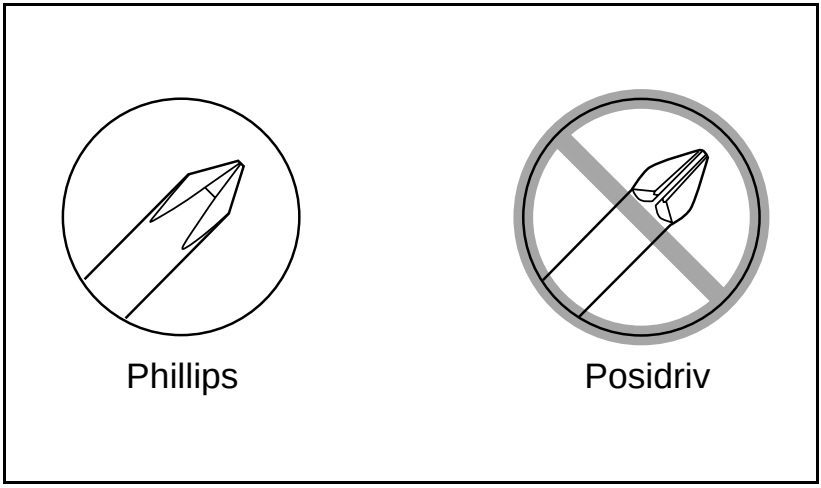

Figure 6-1 **Comparing Phillips and Pozidrive Screws**

Table 6-2 describes the screws used in the printers, and provides guidelines to help determine where each type of screw is used. The screws can vary in length depending on the thickness of the material being fastened.

Typically, plated screws are used in areas visible to the customer, and black screws are used in all other areas of the printer. Always note where each type of screw is located and replace each one into its original location.

Table 6-2 Printer Hardware Descriptions

DRAWING	DESCRIPTION	PURPOSE
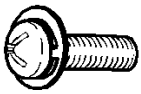	Threaded Phillips screw with lock and flat washer	Used to fasten metal or plastic to threaded plastic or metal.
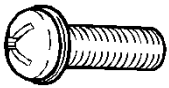	Threaded Phillips washer head screw	Used to fasten metal or plastic to metal when high torque is required.
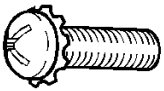	Threaded Phillips w/captive star washer	Used to fasten metal to metal when good electrical contact is needed.
	Self-tapping Phillips screw	Used to fasten metal or plastic to plastic mainframes.
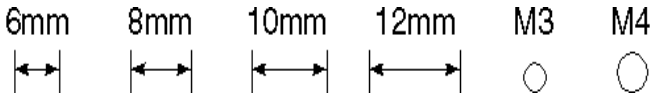		

Caution To install a self-tapping screw, first turn it counter-clockwise to align it with the existing thread pattern, then carefully turn clockwise to tighten. *Do not over-tighten.* If a self-tapping screw-hole strips, repair of the screw-hole or *replacement of the affected assembly is required.*

In the removal and replacement procedures that follow, the number inside the parentheses, such as (4), refers to the number of screws you must remove.

Removing the Covers

Right Side Cover Removal

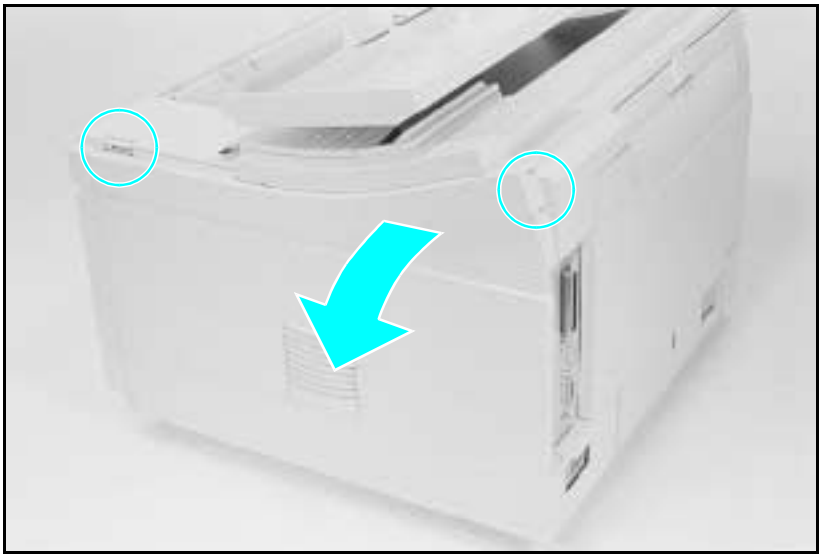

Figure 6-2 Right Side Cover Release Points

LJ 4/4 Plus

1 Open the Top Cover and release the Right Side Cover by pressing at the points shown in Figure 6-2.
2 Fold the cover away from the printer to release the bottom supports and lift the door off of the printer frame.

LJ 5

1 Open the Top Cover and loosen the retaining screw on the right side cover located at the upper right rear of the printer.
2 Slide the right side cover back and fold the cover away from the printer to release the bottom supports.

WARNING! Since the handle is part of the right side cover, the retaining screw must be fully tightened or printer damage or personal injury may result.

Top Cover Removal

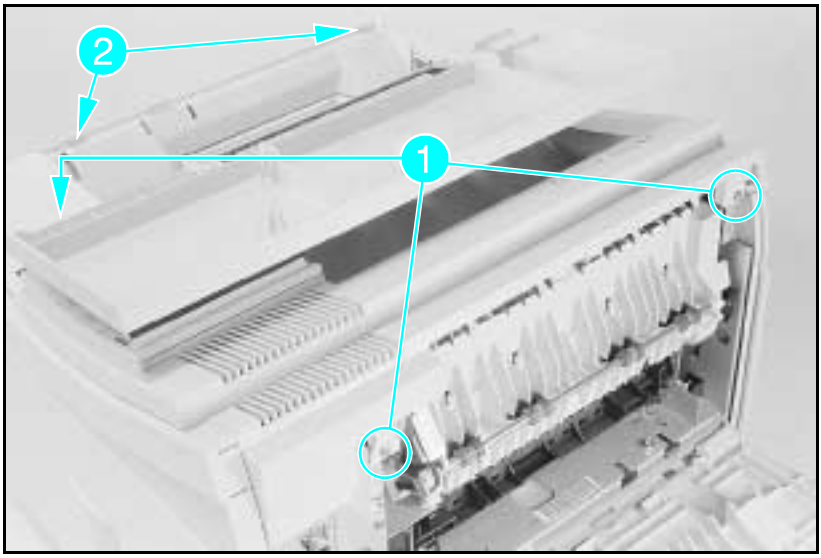

Figure 6-3 Front Top Cover Screws and Latches

1 Open the Top Cover.
2 Remove the Right Side Cover.
3 Open the Rear Door.
4 Remove the (3) screws shown in Figure 6-3, callout *1*.
5 Release the (2) latch points with a flat screwdriver while lifting the Top Cover (see callout *2*.)
6 Carefully lift the top cover to access the Control Panel cable.

(continued on next page)

Figure 6-4 Control Panel Cable

7 Disconnect the Control Panel Ribbon Cable and remove the top cover (see Figure 6-4).

Left Side Cover Removal

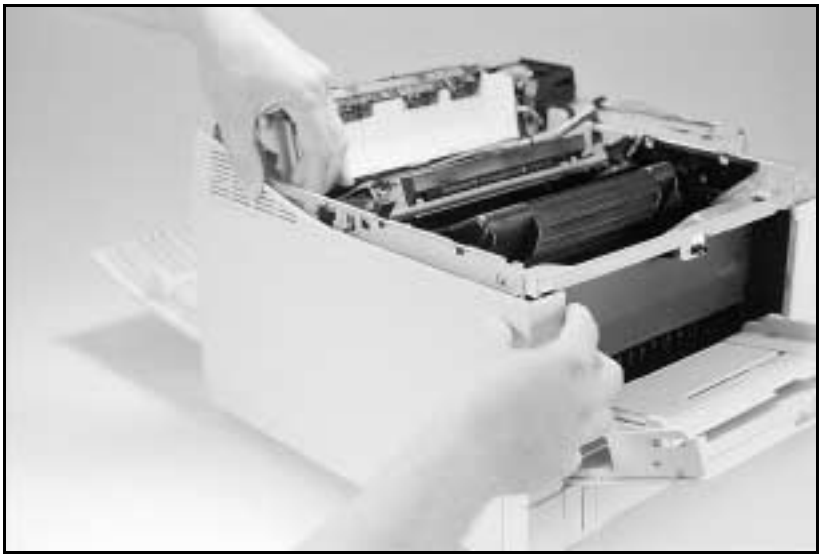

Figure 6-5 Left Side Cover Latches

1 Remove the Right Side Cover and the Top Cover.
2 Release the 2 latch points on the Left Side Cover (front latch first) see Figure 6-5. The latches are on the inside of the Left Side Cover.
3 Fold out the cover and remove.

Note When removing the LJ 5 left side cover, you must gently push the Tray 1 cover forward to enable the left side cover to be folded out and removed.

Rear Door Removal

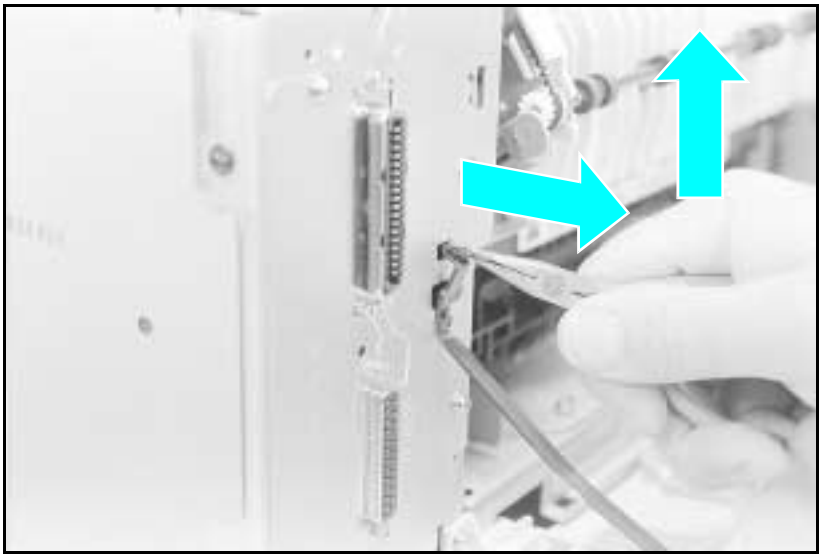

Figure 6-6 Releasing the Door Support

1 Remove the PC tray (Tray 2).
2 Open the Rear Door. Support the door with one hand.
3 Release the door support from the rear of the printer frame as follows: (see Figure 6-6)
   a Using needle-nose pliers, squeeze the tabs on the end of the retaining strap. Slide the strap up and out of the printer frame.
   b Release the retaining strap tab from the slot in the printer frame.
   c Lift the tab to free it from the slot.

(continued on next page)

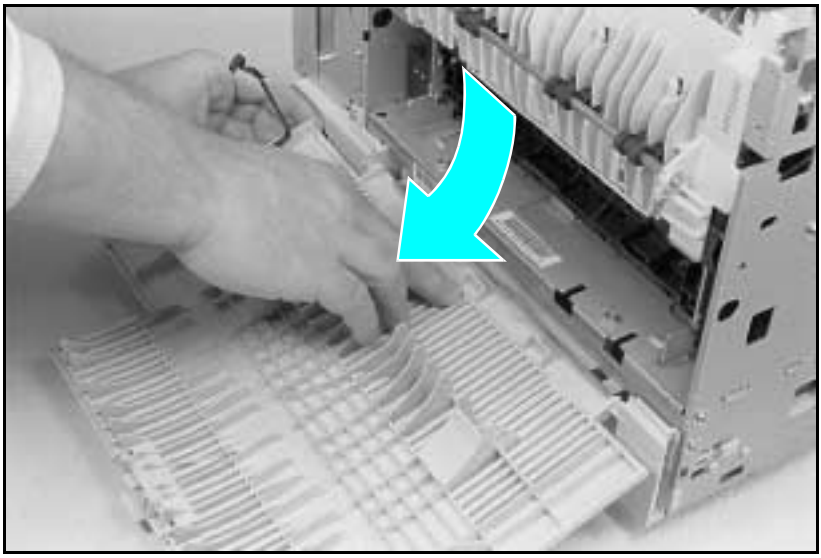

Figure 6-7a Releasing the Door Hinge (LaserJet 4/5)

4 **LaserJet 4/5:** Flex the Rear Door to release it from its hinges. Press the middle of the door while lifting either side (Figure 6-7a). **LaserJet 4 Plus:** Remove the Rear Door Attaching Clip (Figure 6-7b, callouts *1* through *3*). Slide the Rear Door as far as possible toward the left, then rotate to remove (Figure 6-7b, callouts *4* and *5*).

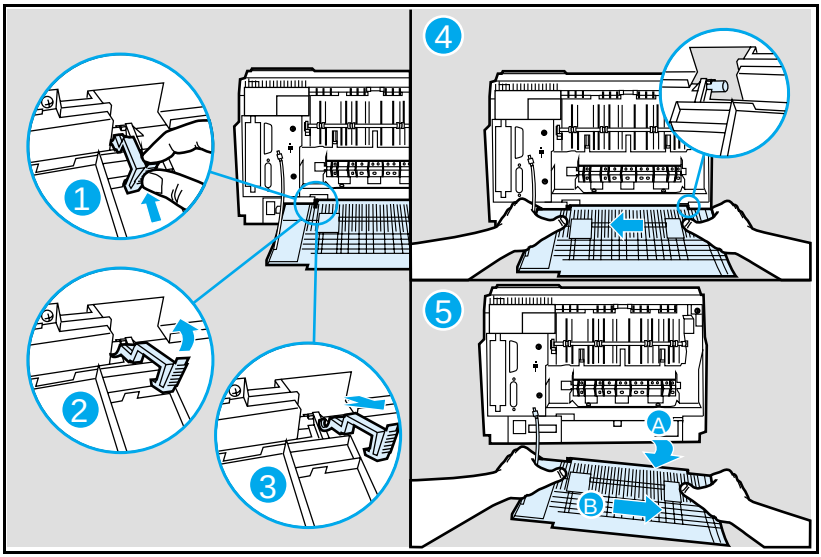

Figure 6-7b Releasing the Door Hinge (LaserJet 4 Plus)

Font Door Cover Removal (LJ 5 Right Front Cover Removal)

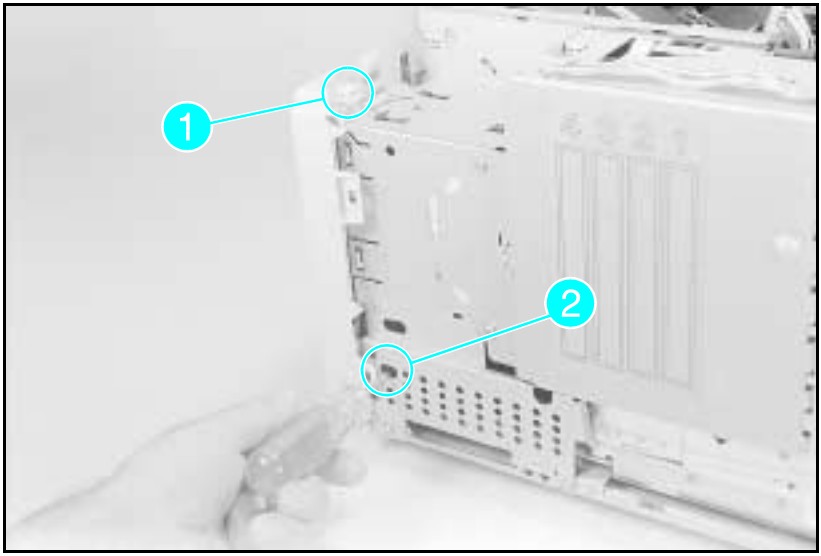

Figure 6-8 Font Door Removal (LaserJet 4 shown)

LJ 4/4 Plus

1 Remove the Right Side Cover, the Top Cover,and the PC Tray.
2 Release the top latch (see Figure 6-8, callout *1*).
3 Release the (2) lower latches through the access hole in the metal cover (see Figure 6-8, callout *2* and Figure 6-9, callout *1*).
4 Remove the Font Door Cover.

Note Figure 6-9 shows the metal side cover removed in order to show the Font Door latches. It is not necessary to remove the metal side cover to remove the Font Door.

LJ 5

1 Remove the right side cover, the top cover, Tray 1 door, and Tray 2.
2 Remove the Right Front Cover retaining screw.
3 Release the top latch. (See Figure 6-8, callout 1)
4 Release the latch halfway down the right side of the cover.
5 Release the (2) lower latches, one through the access hole in the metal cover (see Figure 6-8, callout 2), and one from the bottom of the printer (next to the Tray 2 guide).

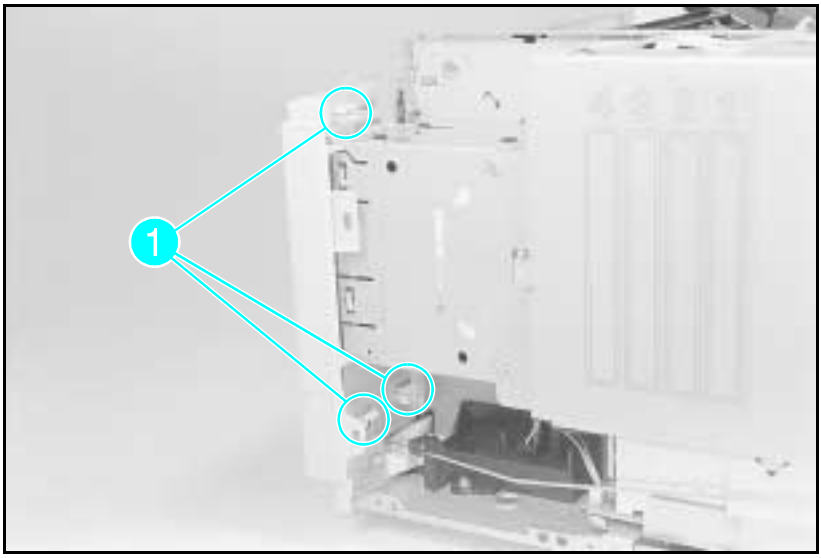

Figure 6-9 Font Door Cover Latches

Multi-Purpose (MP) Tray (Tray 1) Door Removal

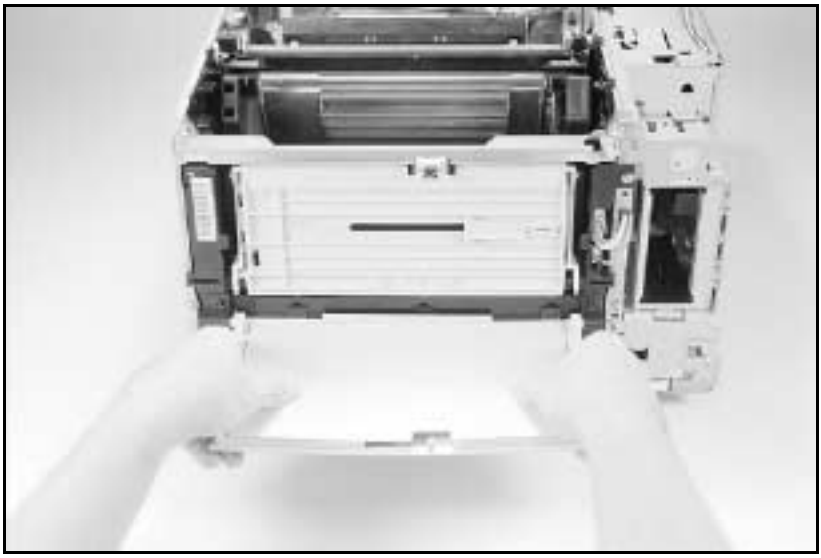

Figure 6-10 Removing the MP Tray Door

1 Remove the PC Tray.
2 Open the MP Tray door and extend the MP Tray.
3 Bend the Door Slides out to release the tray from the door slides (see Figure 6-10). Place the inner door in the “up” position.

LJ 4/4 Plus

4 Flex the MP tray at the lower middle and release the door from its hinges (seeFigure 6-10).

LJ 5

4 Slide Tray 2 to the right to release it from its hinges.

Multi-Purpose (MP) Tray (Tray 1) Removal

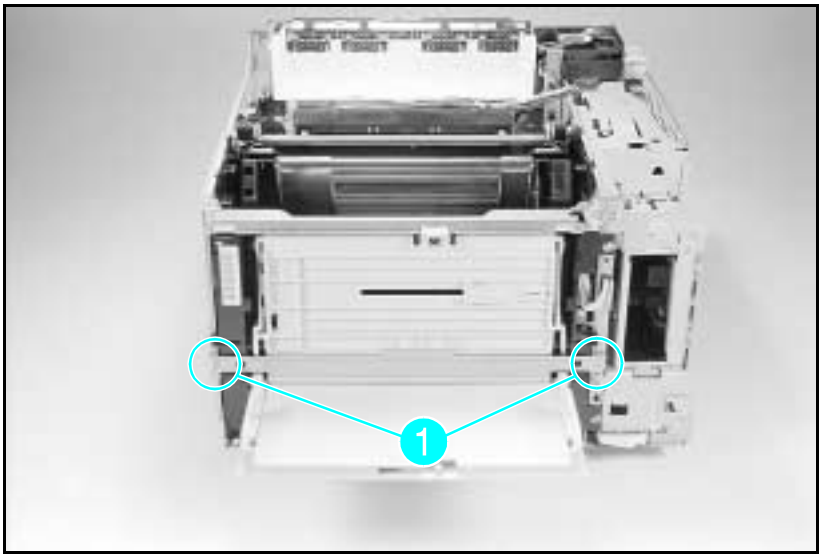

Figure 6-11 Remove the Crossmember Bracket

1 Remove the Right Side Cover, Top Cover, Left Side Cover, MP Tray Door (Tray 1), and the Font Door Cover.

2 Remove the PC Tray (Tray 2).

3 Remove the (2) screws in the Cross-member Bracket as shown in Figure 6-11, callout *1*. Remove the Cross-member Bracket.

(continued on next page)

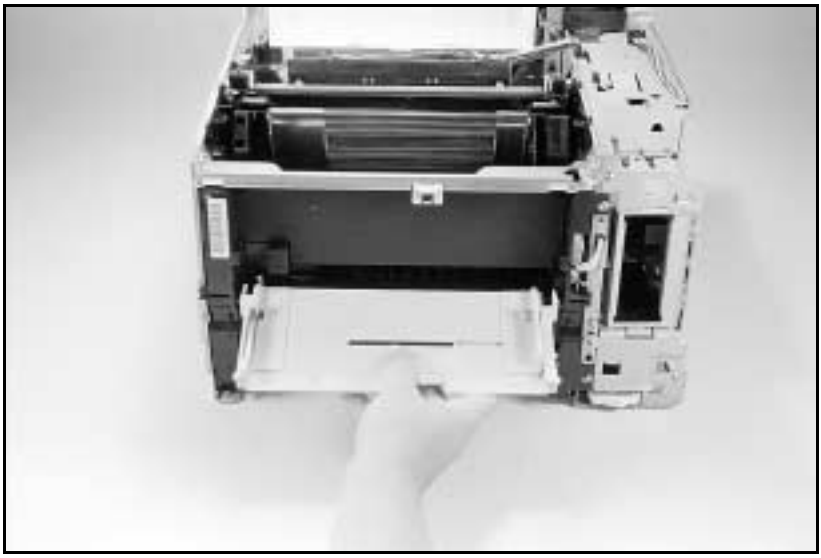

Figure 6-12 Rotate the Tray Down to Release the Hinge from its Slots

4 On the LJ 4+ and LJ 5 you must release the tray tension spring located at the left side of the tray. Use a pair of needlenose pliers to remove the spring from the tray.

5 Rotate the tray down until it slides off its slotted hinges (about 120°)(see Figure 6-12).

Assemblies Removal

Power Supply Removal

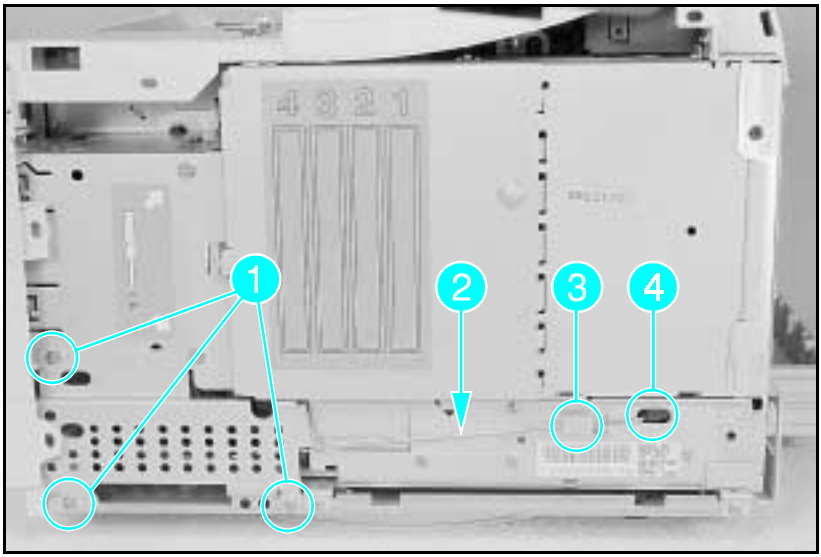

Figure 6-13a Remove the Sheet Metal Plate (LaserJet 4)

1 Remove the Right Side Cover.

2 Remove the (3) or (2) screws from the metal cover at the lower right corner of the printer (see Figure 6-13a or b, callout *1*.) Remove the metal cover.

Note Note which end of the connecting rod is installed into the Power Supply and which end connects into the Rocker Switch.

3 Remove the Power Switch Connecting Rod (callout *2*.)

a lift the rod clear of tab (callout *3*), and remove from socket (callout *4*).

b Remove the rod from the Rocker Switch at the front of the printer.

(continued on next page)

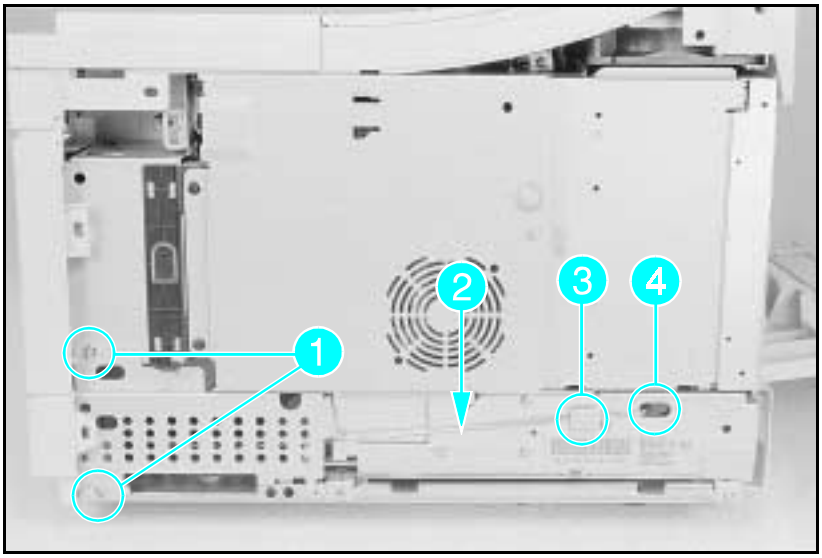

Figure 6-13b Remove the Sheet Metal Plate (LaserJet 4 Plus/5)

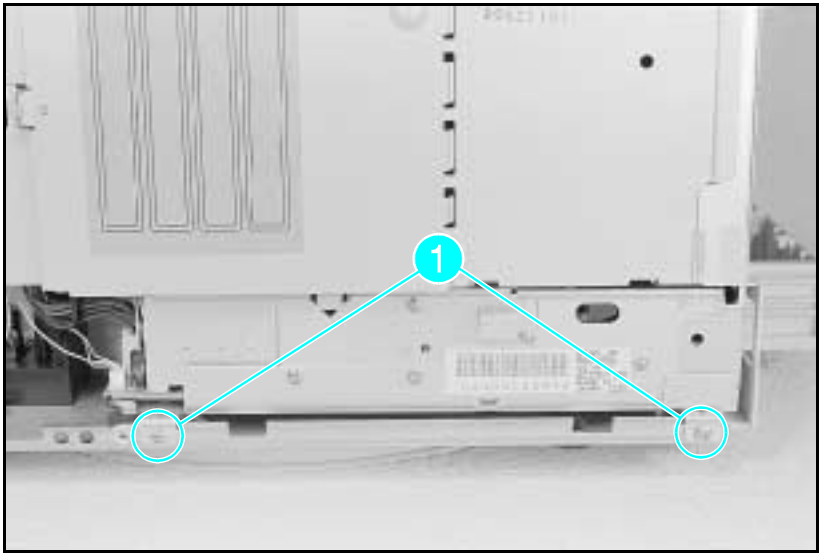

Figure 6-14 Power Supply Screws

4 Remove the (2) screws from the bottom frame (see Figure 6-14, callout *1*).

5 Slide the power supply out the right side of the printer to access the power supply connectors.

(continued on next page)

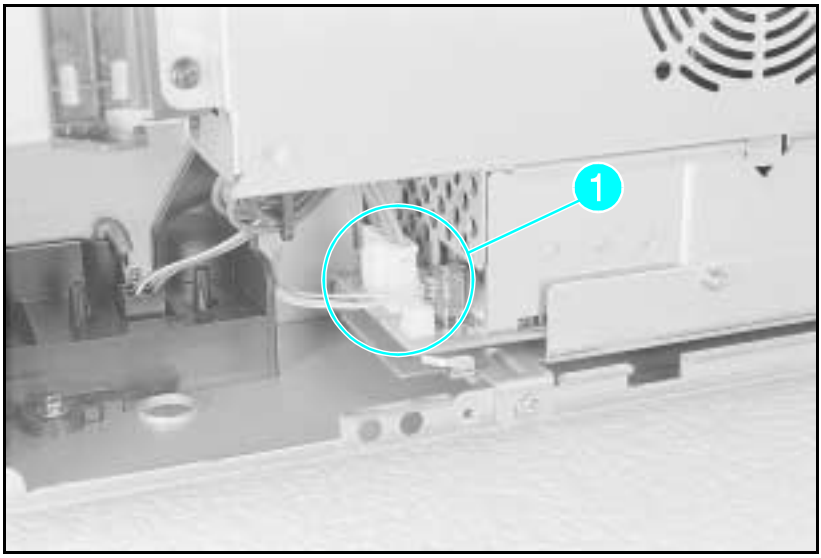

Figure 6-15 **6-wire and 3-wire Connectors for the Power Supply**

6 Remove the (2) connectors (6 wire and 3 wire). (See Figure 6-15, callout *1*.) Squeeze the release tab on the 6-wire connector. Pull the 3-wire connector straight up.

7 Remove the power supply.

Note When replacing the power supply, be sure to use the screws with the star washers to ensure proper grounding and RFI shielding.

Paper Feed Assembly Removal

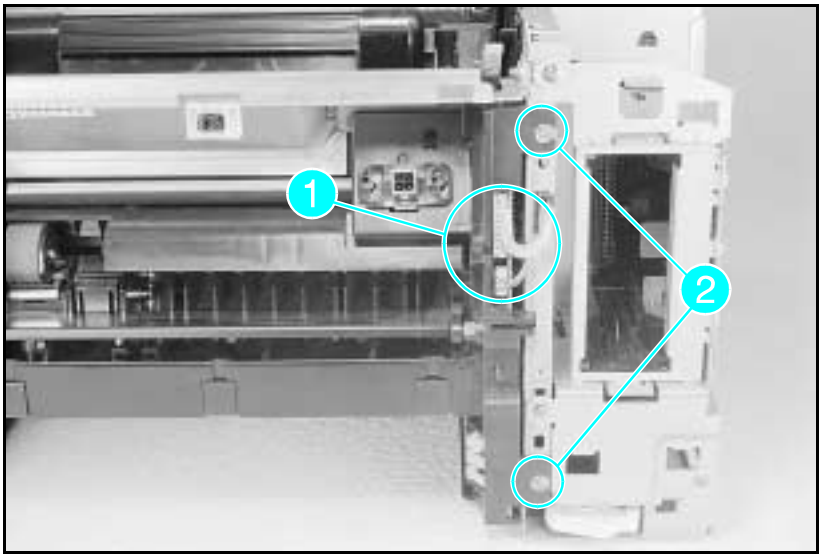

Figure 6-16 Paper Feed Assembly Screws and Connectors

1. Remove the Right Side Cover, the MP opening cover, (see Figure 6-17), the Top Cover and the Left Side Cover, the Font Door Cover, and the PC tray (Tray 2). The MP tray need not be removed, but is shown removed for clarity.
2. Remove the MP Tray (Tray 1) door, the Front Cross-member (Figure 6-11), and the MP Tray.
3. Disconnect the 13-wire connector and the 4-wire connector from the front of the Paper Feed Assembly (see Figure 6-16, callout *1*).
4. Remove the (2) screws from the right side of the Paper Feed Assembly (see Figure 6-16, callout *2*).

(continued on next page)

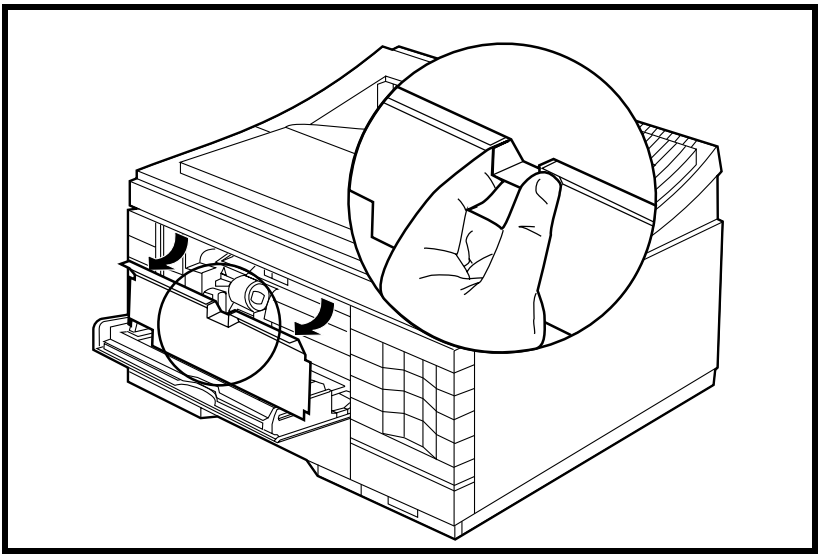

Figure 6-17 MP Tray Opening Cover

(continued on next page)

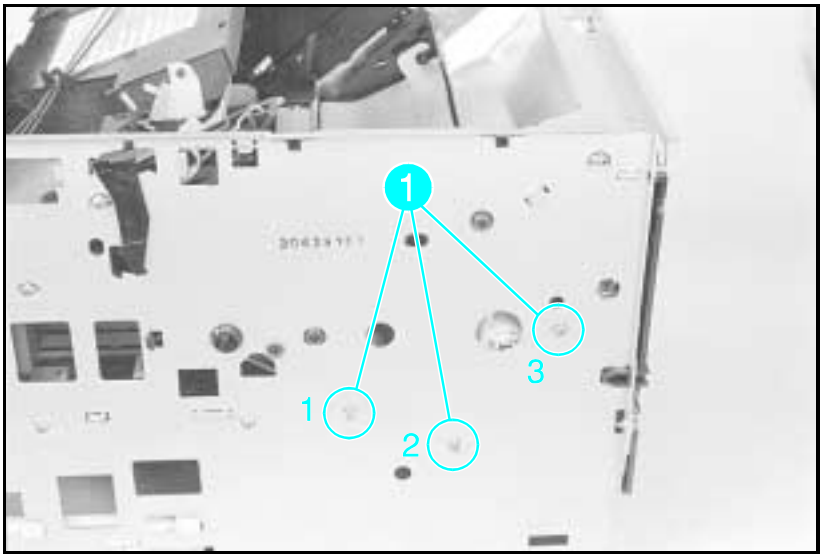

Figure 6-18 Paper Feed Assembly Screws (numbered)

5 Remove the (3) screws from the left side of the printer (see Figure 6-18, callout *1*).

6 Remove the Paper Feed Assembly by lifting it and sliding it out the front of the printer.

Note Replace the screws in order as shown. (1-2-3 is also scribed on the printer chassis.) Tightening these screws in the wrong order can cause paper skew problems.

High Voltage Power Supply (HVPS) Removal

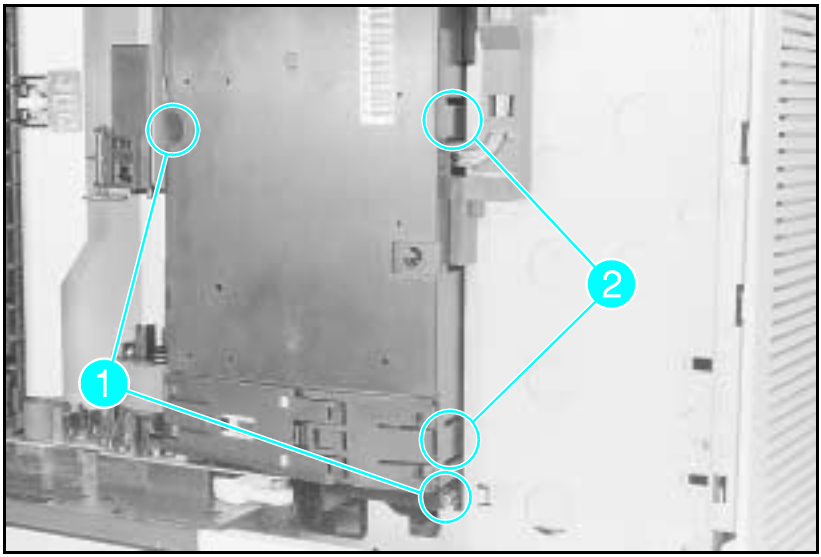

Figure 6-19 HVPS Screws (2) and Latches (2) (Bottom View)

1 Remove the Toner Cartridge and PC tray.
2 Lay the printer on its left side. (Place a cloth under the printer to prevent marking the cover.)
3 Remove the (2) screws that hold the HVPS in place (see Figure 6-19, callout *1*).
4 Release the (2) latches that hold the High Voltage Power Supply (see Figure 6-19, callout *2*).
5 Pull the HVPS straight away from the printer to clear its locator pins and to prevent damage to the HVPS connectors.
6 Remove the HVPS from its housing by releasing the (4) retaining clips that hold the PCA in place.

Note Run a printing self-test after replacing the high voltage power supply. If the printer prints solid black pages, the HVPS may be seated incorrectly. Repeat the installation procedure, being careful to align the high voltage connectors.

Fuser Assembly Removal

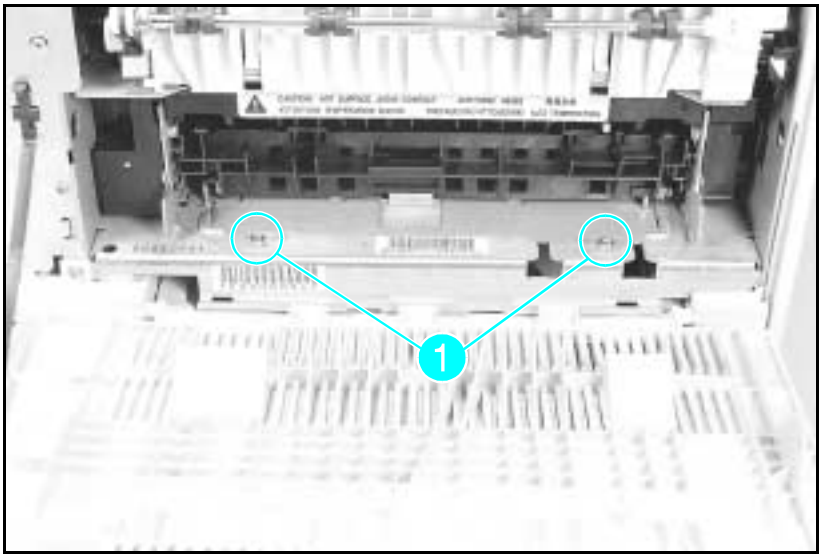

Figure 6-20 Fuser Assembly Screws

Caution *The Fuser Assembly may be hot*. Allow plenty of time for the fuser to cool before beginning the fuser removal procedure.

1 Open the rear door.
2 Remove the (2) screws that hold the Fuser to the printer frame (see Figure 6-20, callout *1*).
3 Slightly lift the Fuser by both the right and left sides to clear the locator points.
4 Pull the Fuser from the printer.

Note The Fuser Assembly from the LaserJet 4 cannot be interchanged with the Fuser Assembly from the LaserJet 4 Plus or 5 printers.

Control Panel and Overlay Removal

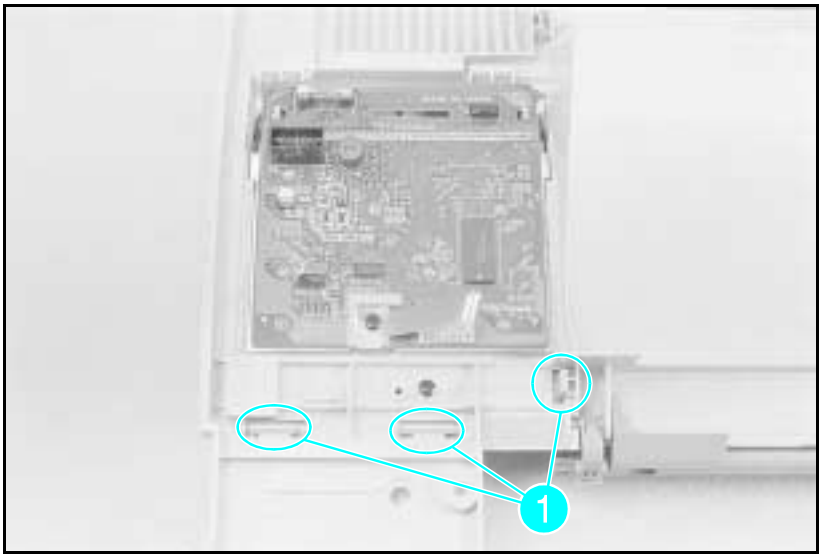

Figure 6-21 Control Panel Latches

1 Remove the Right Side Cover and the Top Cover.
2 Turn the Top Cover over and place it on flat surface.
3 Release the (3) latches that contain the Control Panel (see Figure 6-21, callout *1*).
4 Carefully pivot the Control Panel away from the Top Cover.

(continued on next page)

Note To remove the LaserJet 5 Control Panel, first remove the black screw securing the grounding leaf spring and the Control Panel plate to the Top Cover. Release the two latches at the top of the Control Panel Assembly and pivot the top of the assembly up and out of the printer.

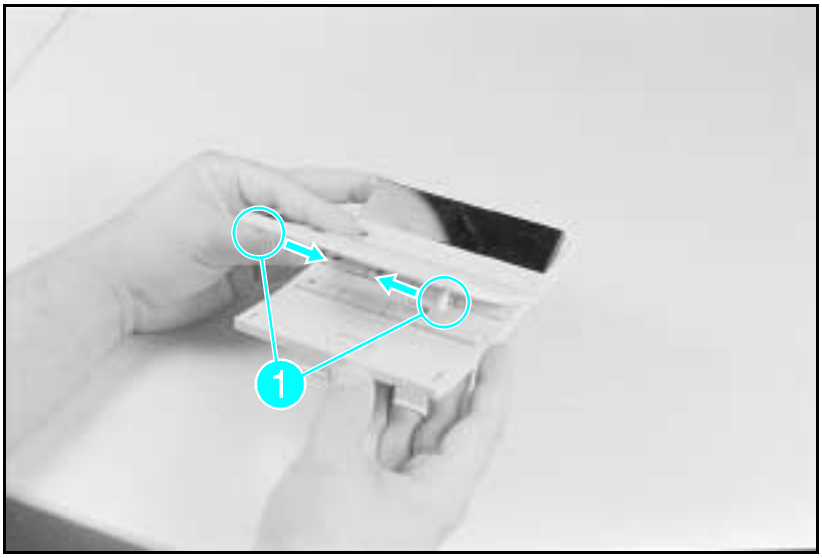

Figure 6-22 Changing the Control Panel Overlay

5 If you must replace the Control Panel Overlay, release the (2) retaining tabs from the Control Panel and separate the overlay from the Control Panel (see Figure 6-22, callout 1).

6 Squeeze the sides of the Control Panel Overlay to release the (2) tabs (see Figure 6-22, callout *1*).

7 Tilt the Overlay up and out.

Note To remove the Control Panel Overlay on the LaserJet 5 printer, first remove the Control Panel Assembly and then slide the Overlay out of the side of the Top Cover. Reinstalling the Control Panel Assembly will secure the Overlay in place.

Removing the SIMMs Door

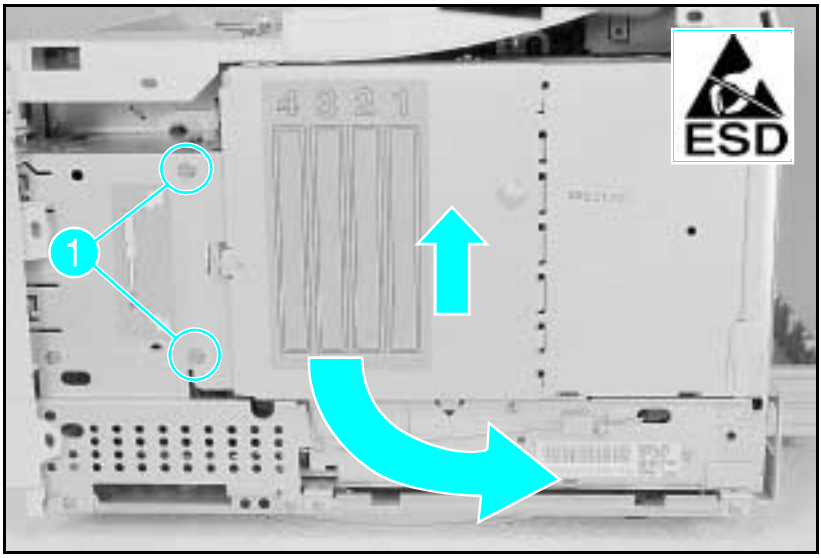

Figure 6-23a Removing the SIMMs Door (LaserJet 4)

1 Remove the Right Side Cover.

LaserJet 4:

2 Remove the (2) screws that hold the SIMMs cover (see Figure 6-23a, callout *1*).

3 Open the SIMMs cover, lift the door slightly to remove the door from the hinge.

(continued on next page)

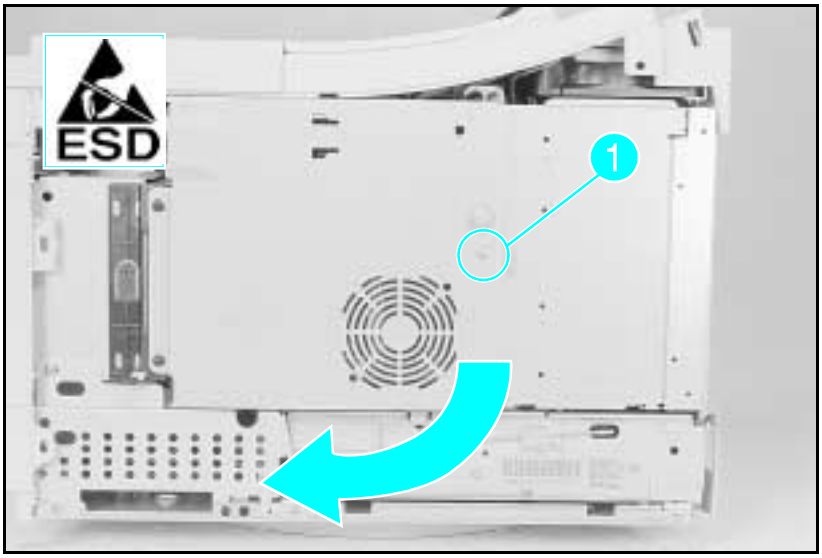

Figure 6-23b Opening the SIMMs Door (LaserJet 4 Plus)

LaserJet 4 Plus/5:

2 Remove the (1) screw that holds the SIMMs cover (see Figure 6-23b, callout *1*).

3 Swing open the SIMMs cover.

Formatter Cage Removal

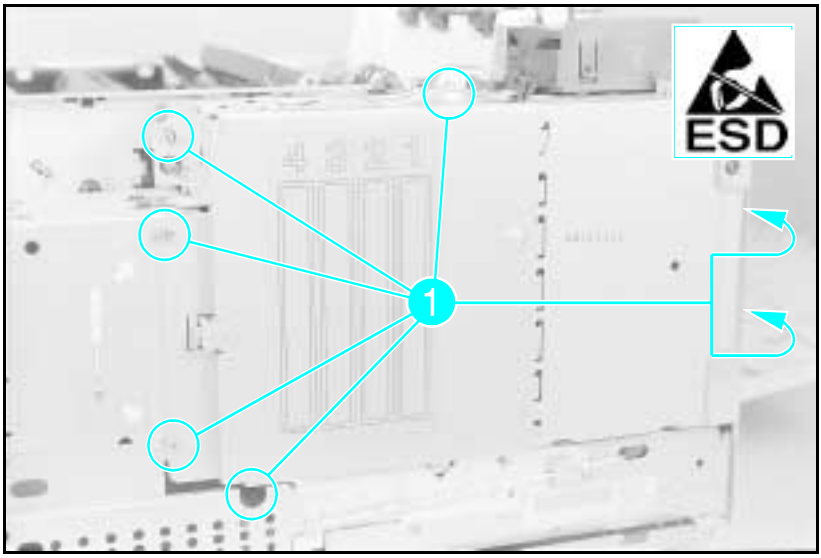

Figure 6-24a **Formatter Cage Screws (Right Side View - LaserJet 4 and 5)**

Note You may wisht to remove the metal cover (on the lower right side) and the power supply for easier access to the Formatter Cage screws.

1 Remove the Right Side Cover and the Top Cover.
2 **LaserJet 4 and 5:** Remove the (7) screws (6 screws in the LJ 5) shown in Figure 6-24a. (2) screws are on the right rear of the printer, (1) screw is under the lower front of the Formatter Cage (except LJ 5).
LaserJet 4 Plus: Remove the (3) screws shown in Figure 6-24b (one screw is located behind the SIMM door), and the (2) screws on the right rear of the printer (shown in Figure 6-24c).
3 Remove the Rear Door Support Strap.
4 Slide the Formatter Cage straight out the right side of the printer, being careful not to damage the Formatter/DC Controller pin connectors.

(continued on next page)

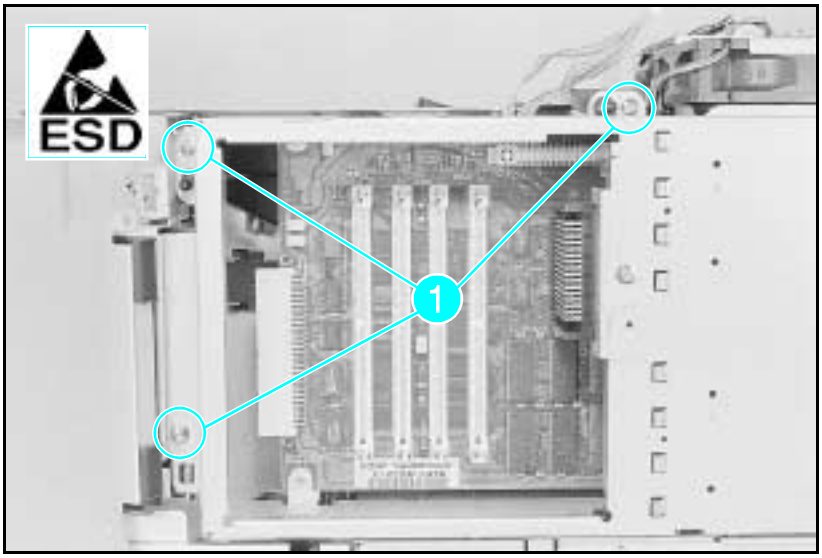

Figure 6-24b Formatter Cage Screws (Right Side View - LaserJet 4 Plus)

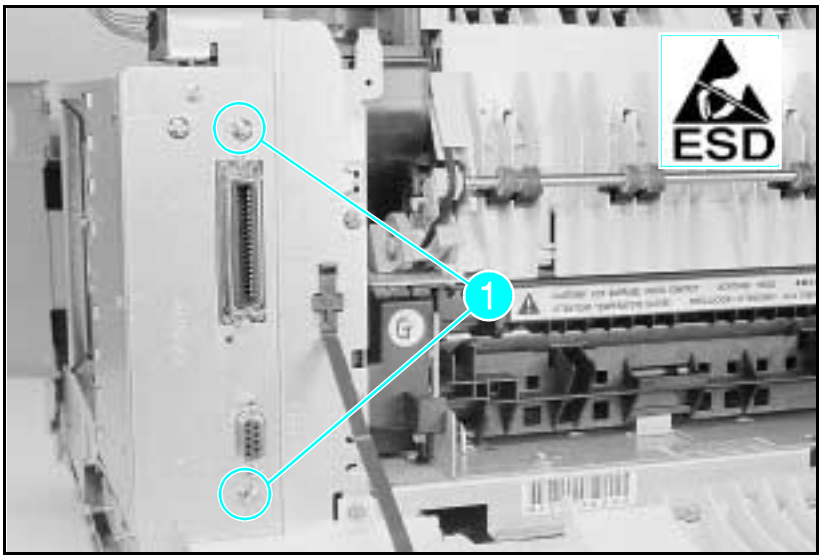

Figure 6-24c Formatter Cage Screws (Rear View - LaserJet 4 Plus)

Formatter PCA Removal

Caution The Formatter PCA is very sensitive to Electrostatic Discharge (ESD) damage. Observe proper ESD procedures when servicing the printer.

Note Before removing the old Formatter PCA, print a `05 SELF TEST` to check the current printer page count, if possible. If a self test is not possible, enter the Service Mode, if possible, to display the page count (see "Service Mode" in Chapter 3).

Remove the Formatter Cage from the printer before beginning the Formatter PCA removal procedure. After the Formatter Cage is removed, remove the Formatter PCA as detailed on the following pages.

(continued on next page)

LaserJet 4 Formatter PCA:

1 Remove any MIO or SIMM modules from the Formatter Assembly.
2 Remove the (2) black screws from the side of the Formatter Cage (see Figure 6-25a, callout *1*).
3 Remove the MIO Connector Support Bracket (see Figure 6-25a, callout *2*).
4 Remove the (2) Formatter PCA mounting screws (see Figure 6-25a callout *3*).

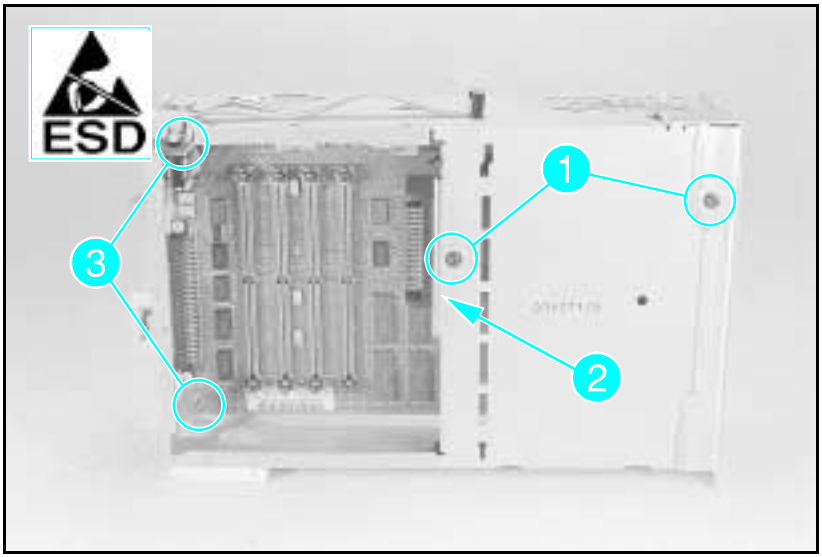

Figure 6-25a Formatter Cover and PCA Mounting Screws (LaserJet 4)

(continued on next page)

5 Remove the (4) Interface Connector Support Screws from the rear of the Formatter Cover. The RS-232 connector is held with 5mm hex-head cap screws (see Figure 6-25b, callout *1*). The parallel connector (see Figure 6-25b, callout *2*.) is held in place with Phillips screws.
6 Remove the Formatter PCA.

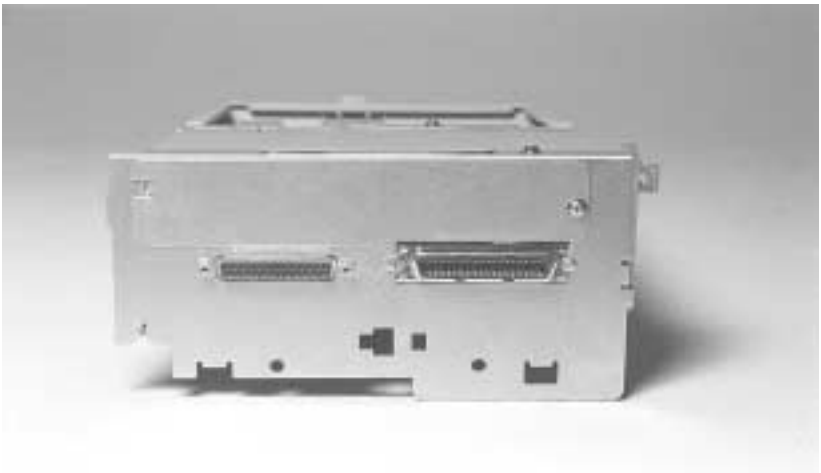

Figure 6-25b Interface Connector Support Screws (LaserJet 4)

Note When replacing the Formatter Assembly be sure to reinstall all SIMM modules and MIO cards. Be sure to reset the page count and the Cold Reset paper size after replacing the Formatter.

(continued on next page)

LaserJet 4 Plus and 5 Formatter PCA

1 Remove any MIO or SIMM modules from the Formatter Assembly.
2 Remove the MIO Connector Support Bracket (see Figure 6-25a, callout *2*).
3 Remove the (4) I/O screws (see Figure 6-26 callout *1*).
4 Remove the (2) Formatter PCA mounting screws (see Figure 6-26 callout *2*).

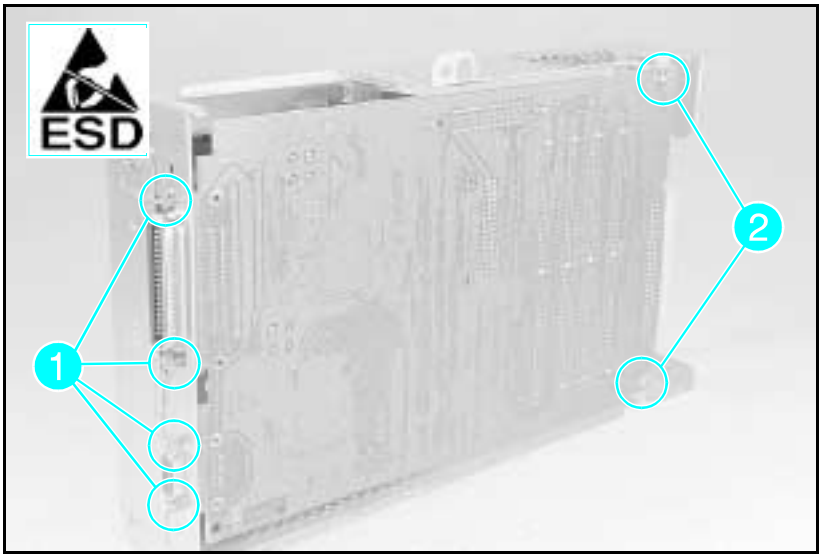

Figure 1-26 **Interface Connector Support Screws (LaserJet 4 Plus and 5)**

Note

When replacing the Formatter Assembly be sure to re-install all SIMM modules and MIO cards.

Be sure to reset the page count and the Cold Reset paper size after replacing the Formatter.

DC Controller Removal

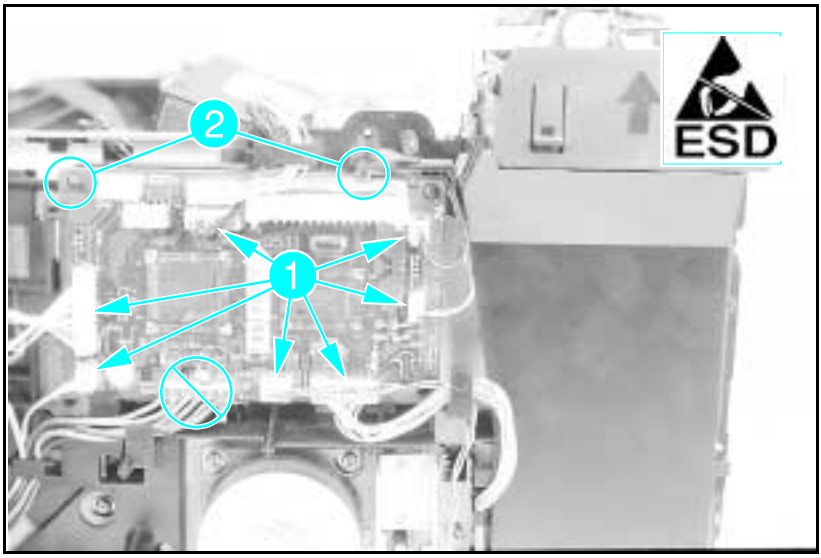

Figure 1-27a **DC Controller Connectors/Retaining Clips (LaserJet 4)**

Note Note the cable routing before beginning this disassembly procedure. Be careful not to damage the cables during re-assembly.

1 Remove the Right Side and the Top Cover Assemblies.
2 Remove the Formatter Cage Assembly.
3 Remove the 6-wire connector from the Power Supply.
4 Remove the plastic DC Controller cover (LaserJet 4 Plus).
5 Remove the DC Controller connectors (see Figure 6-27a or 6-27b, callout *1*).
6 Release the DC Controller from its retaining clips (2) and remove the DC Controller (see Figure 6-27a or 6-27b, callout *2).*

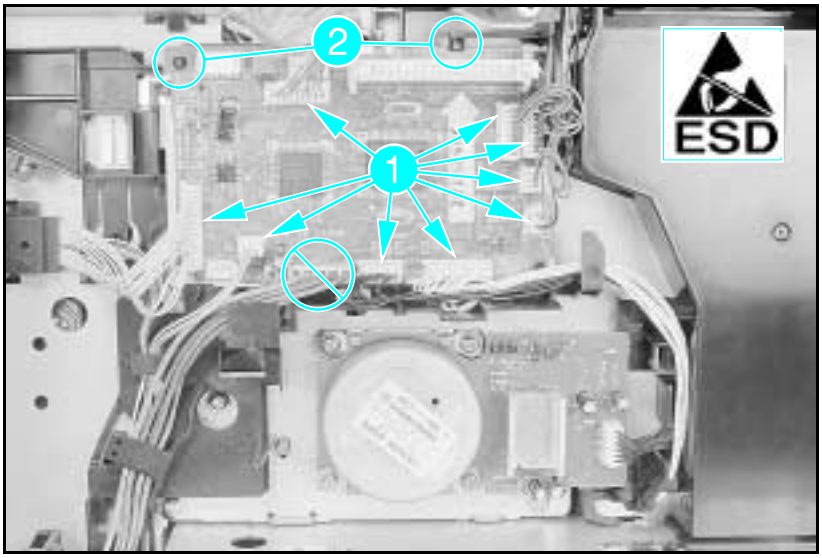

Figure 1-27b DC Controller Connectors/Retaining Clips (LaserJet 4 Plus/5)

DC Controller Installation

Caution When reinstalling the DC Controller PCA it is extremely important that **all cables be properly routed.** If cables are not routed properly, it is difficult to reinstall the Formatter Cage and cable damage may result.

When replacing the DC Controller, be sure to set the leading edge adjustment as shown in the following procedure.

Note The Leading Edge Adjustment is set at the factory and is *not* required as a maintenance procedure. The Leading Edge Adjustment should be done only when the DC Controller is replaced.

The following procedure is performed with the Formatter Assembly removed.

To set the Leading Edge Registration:

1. Install the new DC Controller in the reverse order of the removal.
2. Run a test print to check the leading edge adjustment (as shown in Figure 6-28.
3. Use VR202 (LaserJet 4) or VR201 (LaserJet 4 Plus and 5) (see Figure 6-29) to adjust the leading edge registration to the dimension shown in Figure 6-28 (a=2mm).
4. Make several test prints (`15 ENGINE TEST` as shown in Figures 3-5 and 3-6) and check the adjustment. Repeat the above steps until the adjustment is correct.

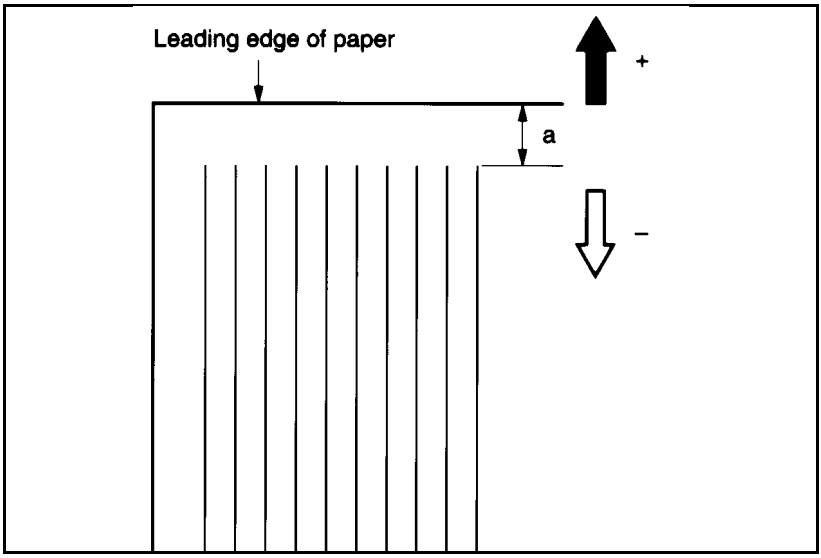

Figure 1-28 Leading Edge Registration Adjustment Dimensions

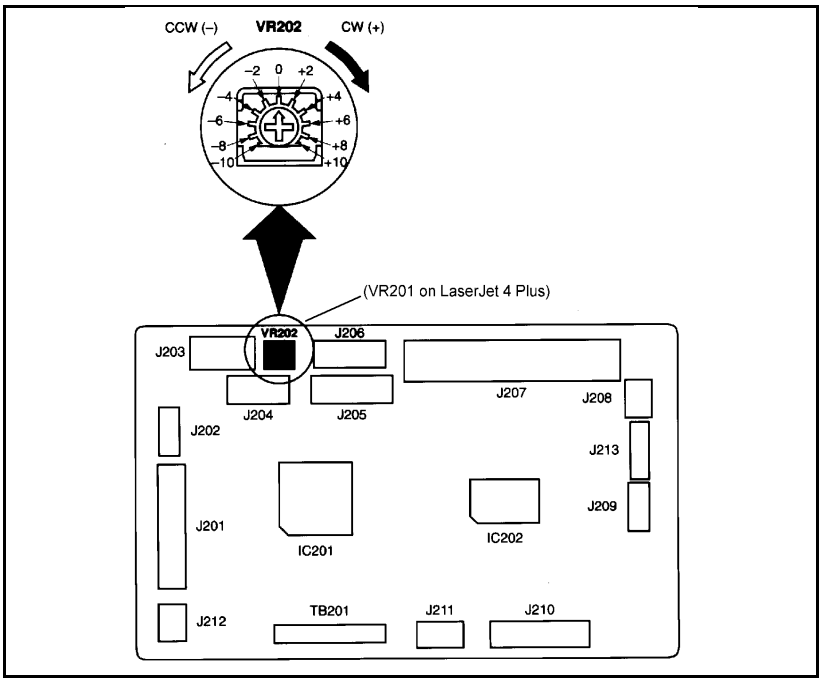

Figure 1-29 VR202 Settings (LaserJet 4 shown)

Main Motor Assembly Removal

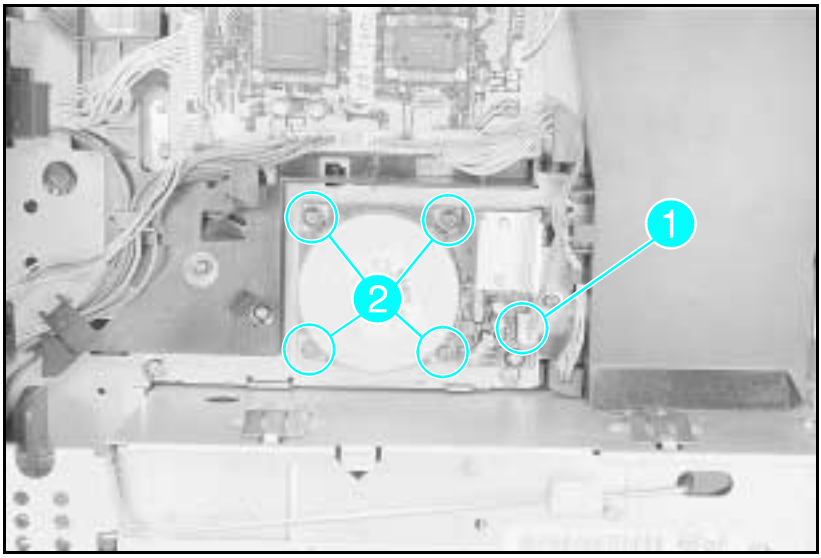

Figure 1-30 Main Motor Assembly

1 Remove the Right Side Cover, Top Cover, and the Formatter Cage Assembly.

2 Unplug the Main Motor connector from the Main Motor Assembly (see Figure 6-30, callout *1*).

3 Remove the (4) Main Motor screws (see Figure 6-30, callout *2*).

4 Remove the Main Motor.

Gear Assembly Removal

1 Remove the Top Cover, the Right Side Cover, the Fuser Assembly, and the Formatter Assembly.
2 Remove the Main Motor Assembly (see Figure 6-30).
3 Remove the (2) screws that hold the Gear Assembly (see Figure 6-31 callout *1*).
4 Slide the Gear Assembly from the rear of the printer.

Note Before tightening down the mounting screws, be sure the shoulder around the upper left mounting screw hole on the gear assembly protrudes through the frame.

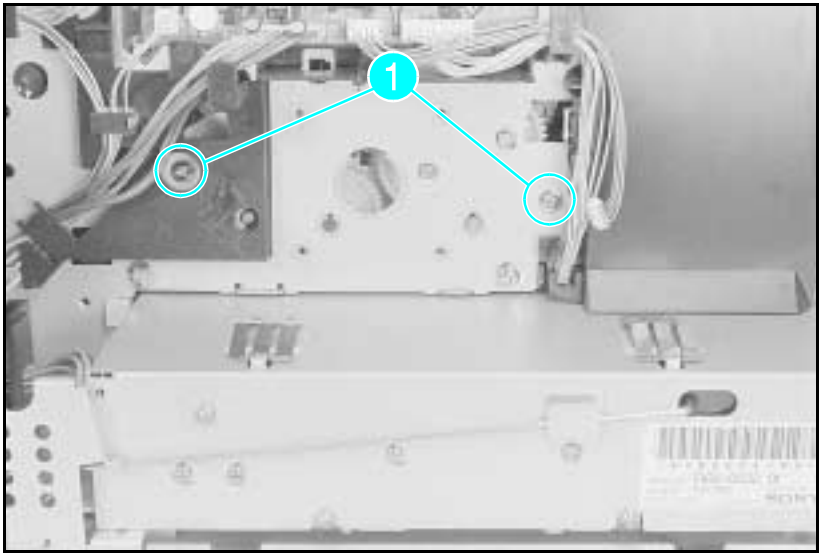

Figure 1-31 Gear Assembly Screws (Located behind Main Motor)

Fan Removal

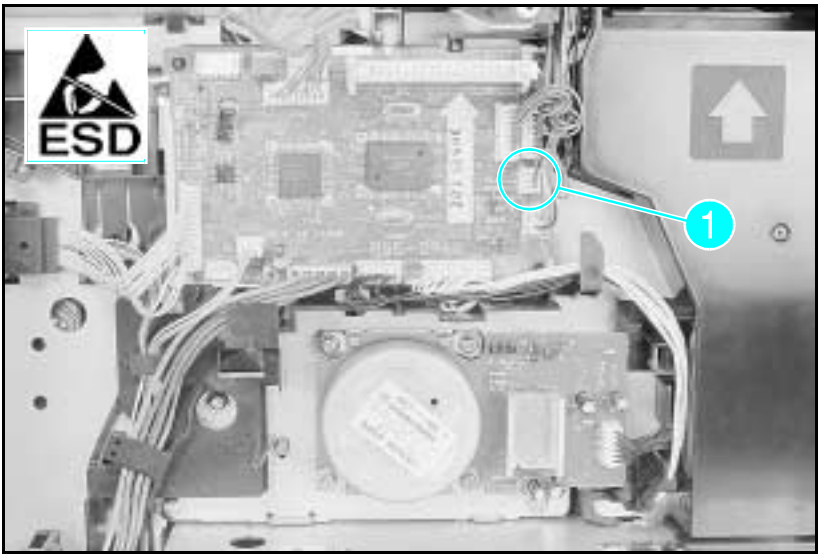

Figure 1-32 Fan Connector

Note Note the cable routing before beginning this disassembly procedure. Be careful not to damage the cables during re-assembly.

1 Remove the Right Side Cover, the Top Cover, and the Formatter Cage Assembly.
2 Unplug the fan connector (J209 on the LaserJet 4, J211 on the LaserJet 4+/5). (See Figure 6-32, callout *1*.)

(continued on next page)

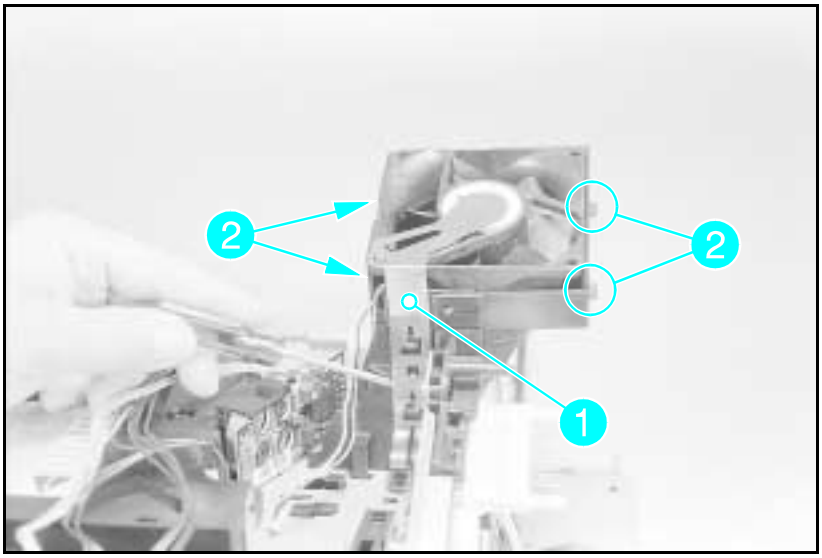

Figure 1-33 Exhaust Fan Removal (Laser Jet 4 shown)

3 Remove the RFI shield (LJ 4 only) by releasing the retaining tab and sliding the shield up (see Figure 6-33, callout 1).

4 **Laser Jet 4:** Release the (4) clips from the fan ducting to provide clearance and remove the fan from the top of the printer (see Figure 6-33, callout *2*).
Laser Jet 4 Plus/5: Remove (1) screw on the right-rear and release the tabs on the lower left adjacent to the Output Paper Assembly

5 Remove the fan.

Note When reinstalling the fan, verify that the air is blowing upward.

Output Assembly Removal

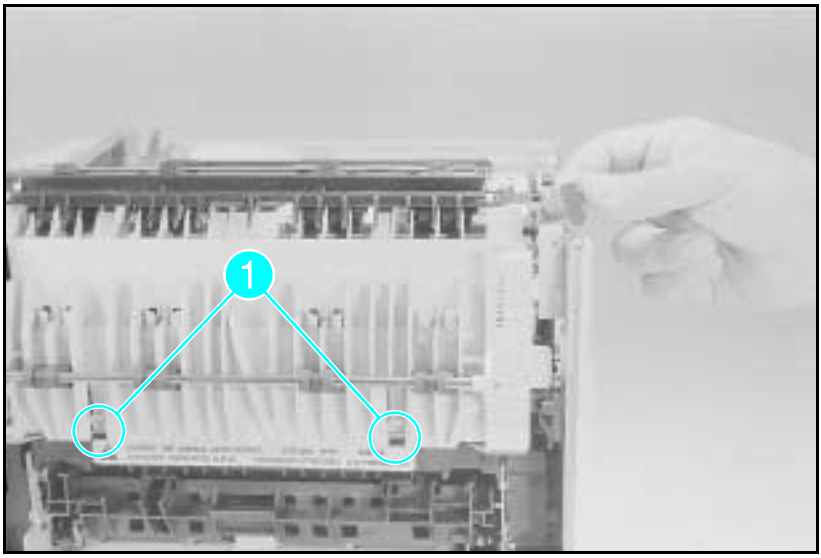

Figure 1-34 Output Assembly Removal

1 Remove the Right Side Cover, the Top Cover, and the Left Side Cover.
2 Release the grounding strap from the left side of the frame.
3 Rotate the top of the Output Assembly toward the front of the printer while releasing the two retaining latches (see Figure 6-34, callout 1) until the locating tabs are free. Slide the assembly to the rear and lift it out of the printer.

Paper Exit Sensor (PS3) Removal

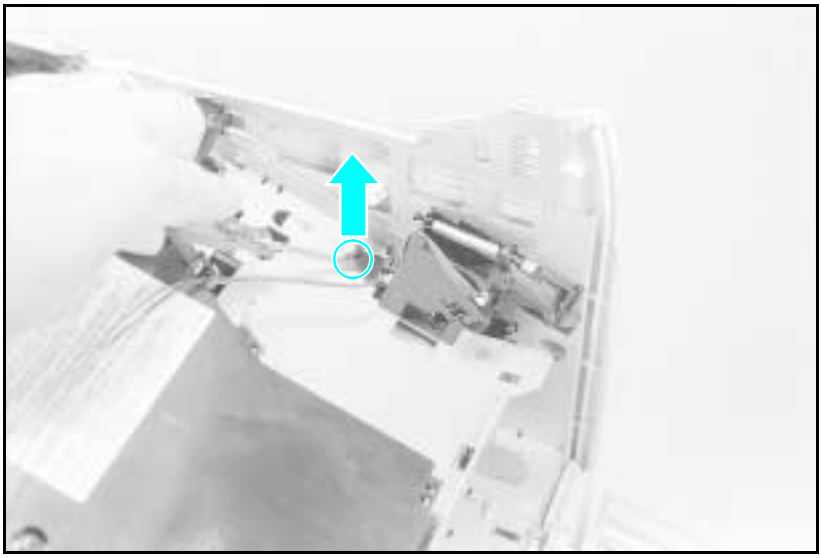

Figure 1-35 Exit Sensor

1 Remove the Right Cover, Top Cover, and the Output Assembly.
2 Disconnect the Sensor Cable.
3 Lift the Sensor Retaining Latch and slide the sensor forward (see Figure 6-35).
4 Remove the Paper Exit Sensor.

Scanner Assembly Removal

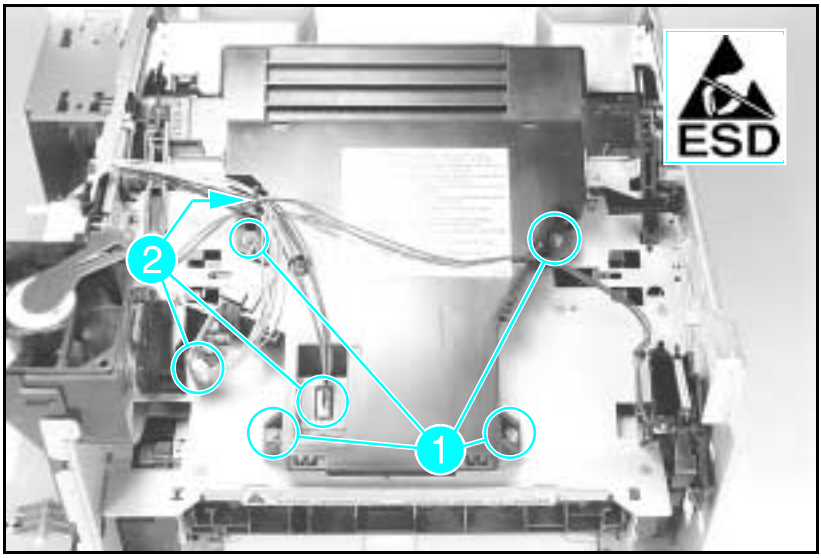

Figure 1-36 Scanner Assembly Removal

1 Remove the Right Side Cover, Top Cover, Left Side Cover, and the Output Assembly.
2 Remove all cables from the Scanner retaining clips.
3 Remove the (3) connectors (see Figure 6-36, callout *2*).

Note Be careful not to flex the Laser PCA when removing or installing the cables. The Laser PCA can be damaged easily.

4 Remove the (4) screws from the Scanner Assembly. (see Figure 6-36, callout *1*).
5 Remove the Scanner Assembly.

Note When installing the Laser/Scanner Assembly, check that the Laser Shutter closes when the Toner Cartridge is removed.

Lower Cassette Assemblies

The field-replaceable assemblies of the Lower Cassette are:

- Lower Cassette Sensor PCA Assembly
- Lower Cassette Pickup Motor Assembly

Lower Cassette Sensor PCA Removal

1 Release the Sensor PCA cover latches (see Figure 6-37 callout *1*).
2 Cut the tie-wrap and remove the (3) sensor connectors (see Figure 6-37 callout *2*).
3 Release the catch at the bottom rear of the Sensor PCA. (Use a slender object like a flat-blade screwdriver.)
4 Remove the Sensor PCA.

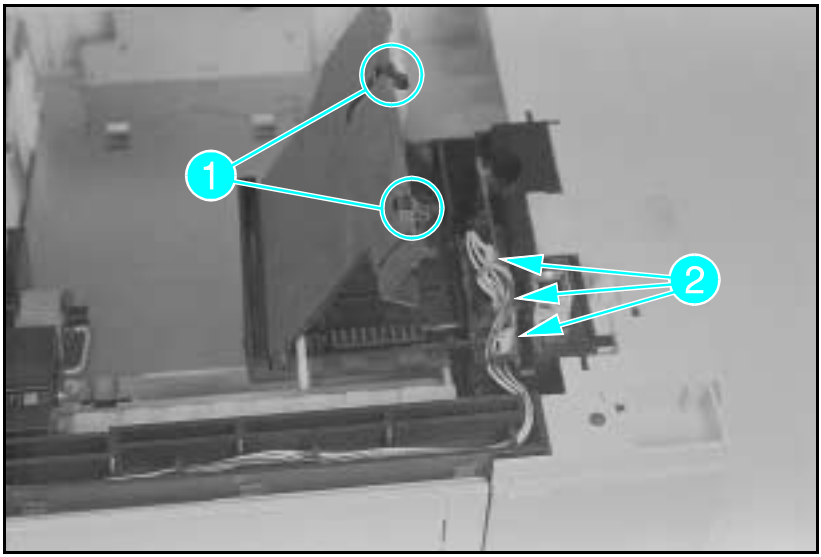

Figure 1-37 Lower Cassette Sensor PCA Latches and Connectors

Lower Cassette Pickup Motor Removal

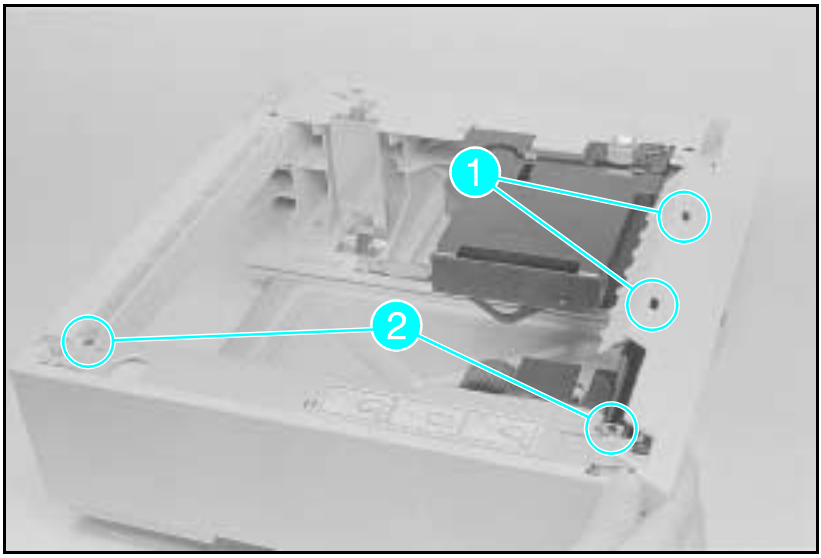

Figure 1-38 Lower Cassette Upper Front Cover

1. Open the sensor cover and disconnect the center and rear connectors (see Figure 6-37, callout *2*).
2. Release the (2) tabs that hold the Upper Front Cover (access the tabs through the slots with a small screwdriver - see Figure 6-38 callout *1*). Remove the cover by rotating it toward the front.
3. Remove the (2) screws from the front and rear left side (see Figure 6-38 callout *2*).
4. Remove the cables from the race channel at the front of the Lower Cassette Base (see Figure 6-37).

Note Note how the cables are routed in the the cable race. Be careful not to damage the cables during reassembly.

(continued on next page)

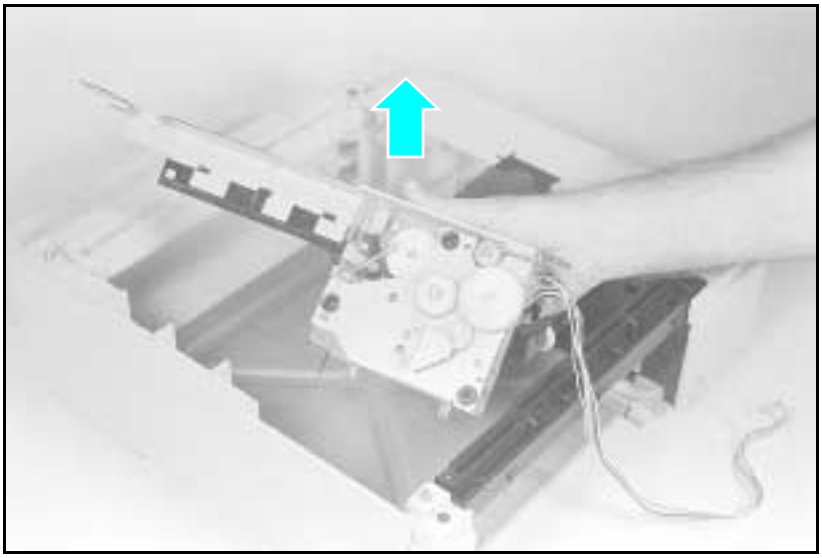

Figure 1-39 Lower Cassette Motor

5 Lift the motor assembly straight up out of the the Lower Cassette Base (see Figure 6-39).

Note Note the ground connector underneath the Motor Assembly. Be careful not to damage this connector during reassembly.

Replacing Fuser Assembly Parts

The following procedures describe the removal and replacement of major Fuser Assembly Components (Fusing Roller, Thermistor, Thermoswitch, and Heater Lamp). When performing these procedures, note the order in which the parts were removed and their orientation.

Caution Handle the Heater Bulb by the ceramic ends. Do not touch the Heater Bulb, or allow it to become contaminated. If contamination occurs, clean the bulb thoroughly with isopropyl alcohol.

Fuser Assembly Configuration

Figure 6-40 provides an overview of the orientation of the major Fuser Assembly components. Before beginning the fuser disassembly procedures, become familiar with the location and orientation of the various Fuser Assembly parts (see Table 6-1).

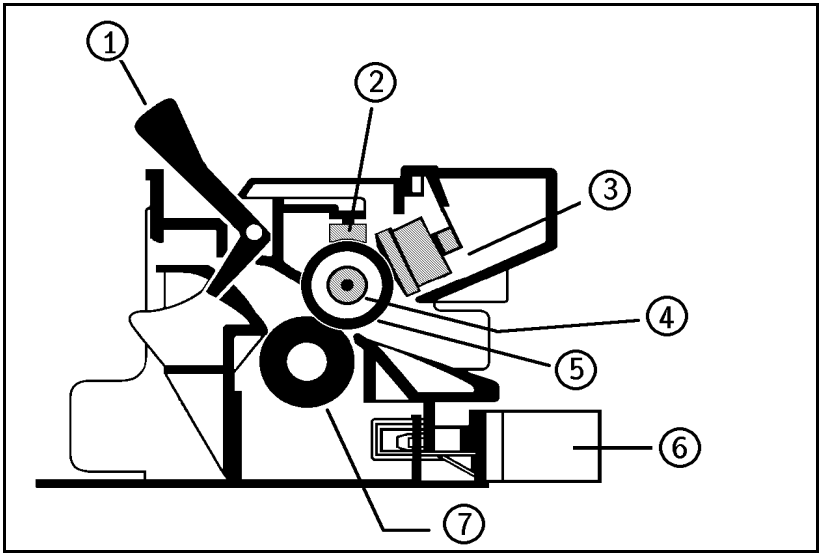

Figure 1-40 Fuser Assembly

Table 1-1 Fuser Assembly Configuration

Callout	Assembly	Callout	Assembly
1	Exit Sensor Flag	5	Fusing Roller
2	Thermistor	6	Plug to Interconnect PCA
3	Thermoswitch	7	Pressure Roller
4	Heat Lamp		

Removing the Fuser Roller Heat Lamp

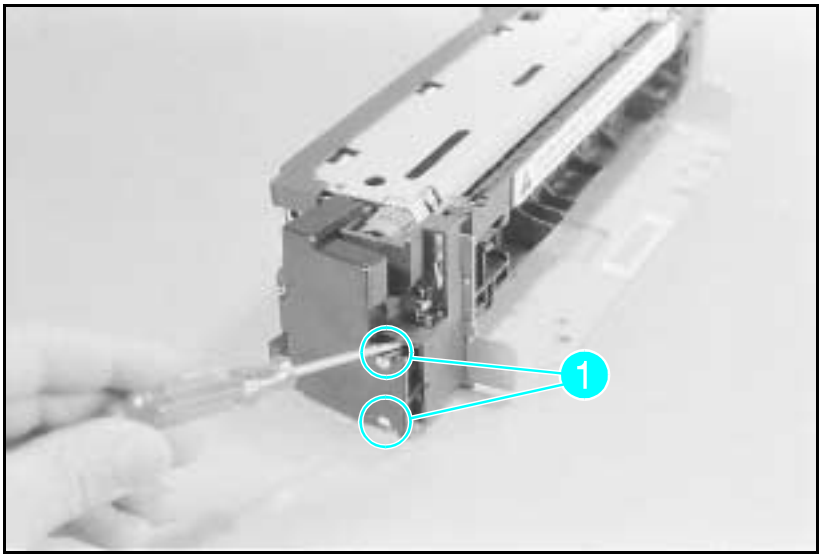

Figure 1-41 Fuser End Cap Removal (LaserJet 4 only)

1 **Laser Jet 4 only**: Remove the (2) latches that hold the right side cover. (There is a gear exposed on the right side of the fuser, see Figure 6-41, callout *1*.)
2 Release the (7) latches on the LaserJet 4 or the (5) latches on the LaserJet 4 Plus that hold the wire cover to the Fuser Assembly. These latches can be accessed through slots on top of the fuser.

(continued on next page)

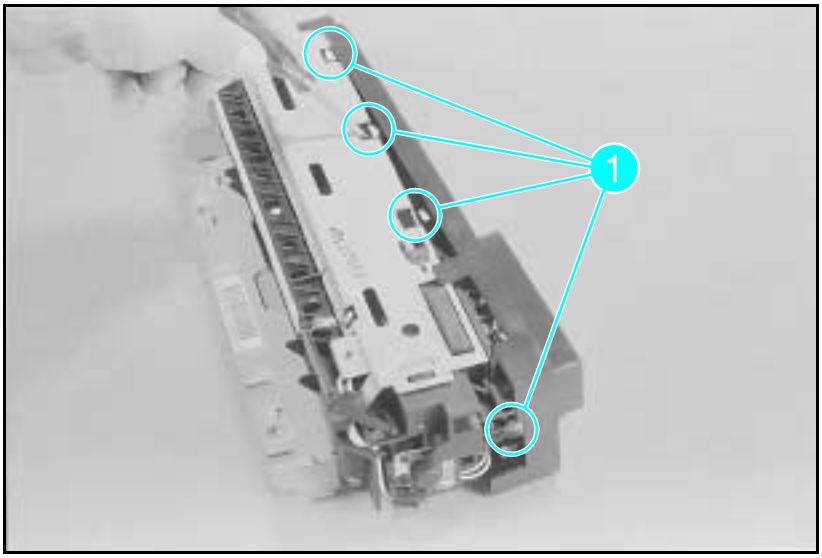

Figure 1-42 Fuser Wire Harness Cover Removal (LaserJet 4)

3 **LaserJet 4**: With a screwdriver, release the latches by first pressing to clear the lower latch, then lifting to release the upper latch (see Figure 6-42a).
LaserJet 4 Plus: With a screwdriver, release the latches by first pressing to clear the lower latch, then lifting to release the upper latch. Repeat until all (4) latches are free, then rotate the cover to release the latch on the side (see Figure 6-42b and 6-42c).

4 Release the two end latches (see Figure 6-42b).

Note Six of the seven latches are accessed from the top of the wire cover. These latches are beneath the felt pad. The slot on the front left side of the wire harness cover is the best place to begin removing the cover.

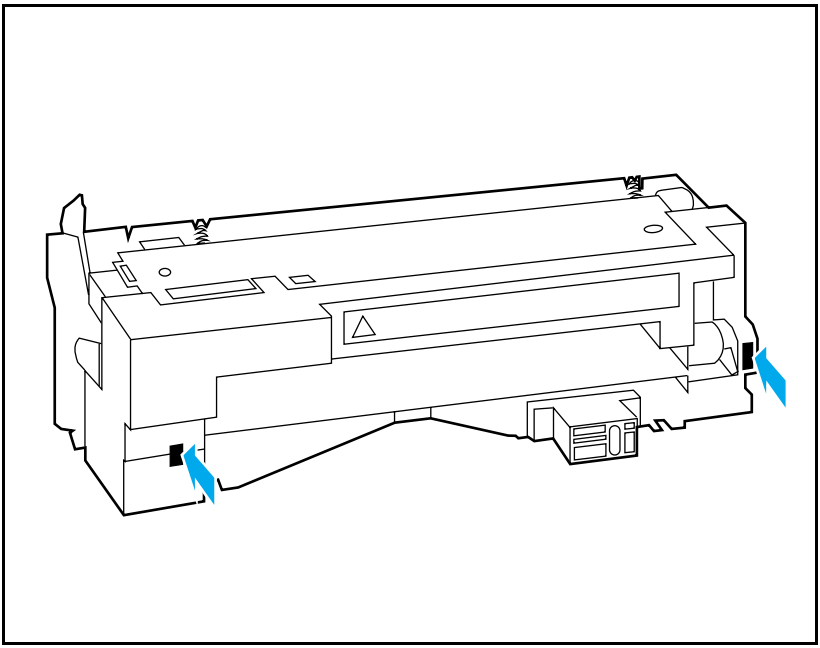

Figure 1-42b Fuser Cover End Latches (LaserJet 4 Plus)

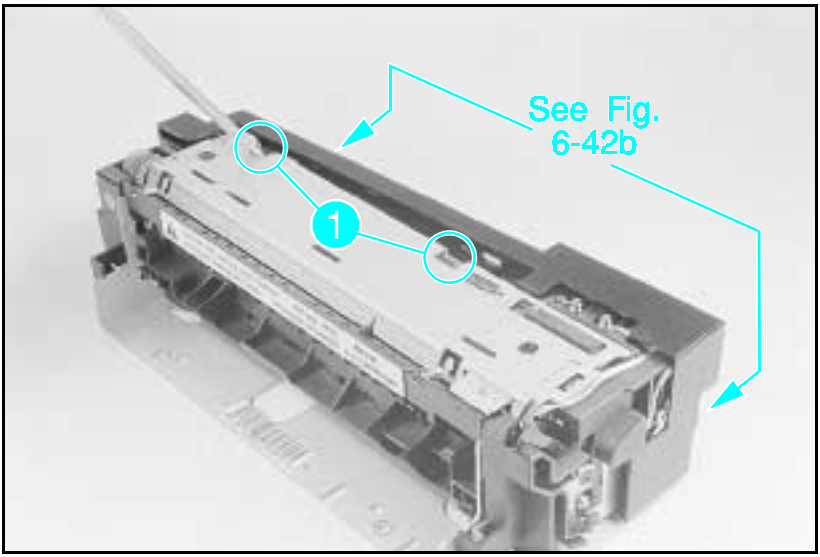

Figure 1-42c Fuser Wire Harness Cover Removal (LaserJet 4 Plus)

(continued on next page)

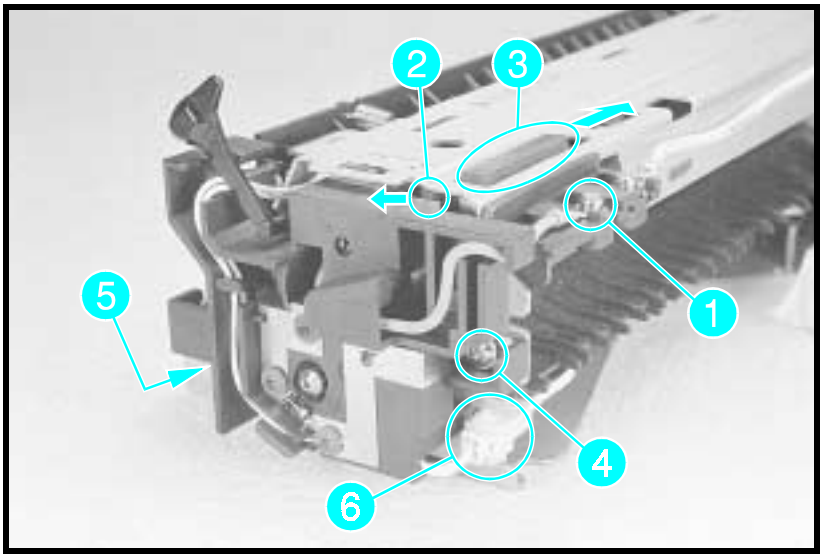

Figure 1-43 Left Side Fuser Cover

5 Remove the (1) Heat Lamp lead (thermoswitch screw)(see Figure 6-43 callout *1*).

6 Press the thermoswitch tab towards the paper exit flag to release the tab (see Figure 6-43 callout *2*). Slide the Thermoswitch off the fuser frame (see Figure 6-43, callout *3*).

7 **LaserJet 4**: Remove the cable retainer from the fuser frame, and free the heat lamp lead from the cable retainer. Note the orientation of the cable retainer.
LaserJet 4 Plus/5: Remove the (2) screws from the end cover (see Figure 6-43, callouts *4 and 5*). Note the wavy washer on the (1) screw touching the copper contact (see Figure 6-43, callout *4*). Remove the thermistor connector from the frame and pull apart (see Figure 6-43, callout *6*). Note the position of the Fuser Shipping Lever and remove from assembly.

(continued on next page)

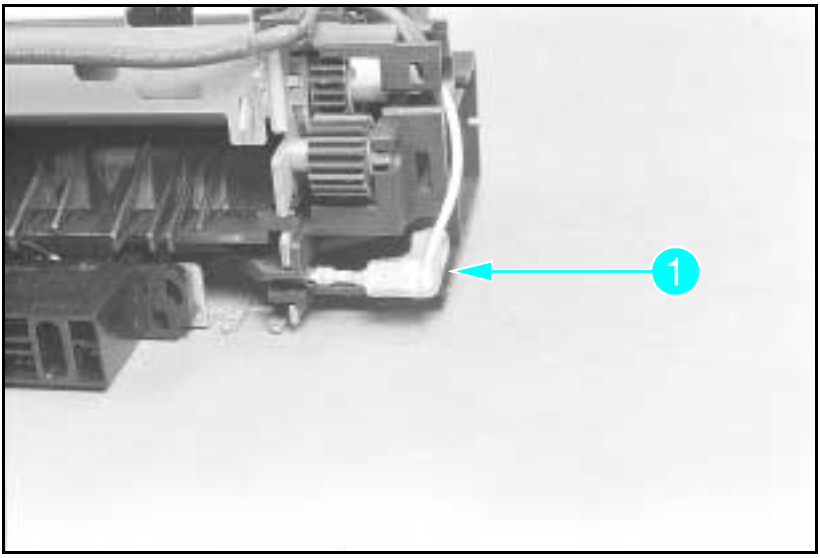

Figure 1-44 **Gear Side Heat Lamp Connector**

Note **LaserJet 4 and 5 only:** Note the orientation of the bushing on the left side of the Fusing Roller.

8 Squeeze the lamp connector to release the slip-on connector locking tab from the right side of the heat lamp (see Figure 6-44, callout *1*).

(continued on next page)

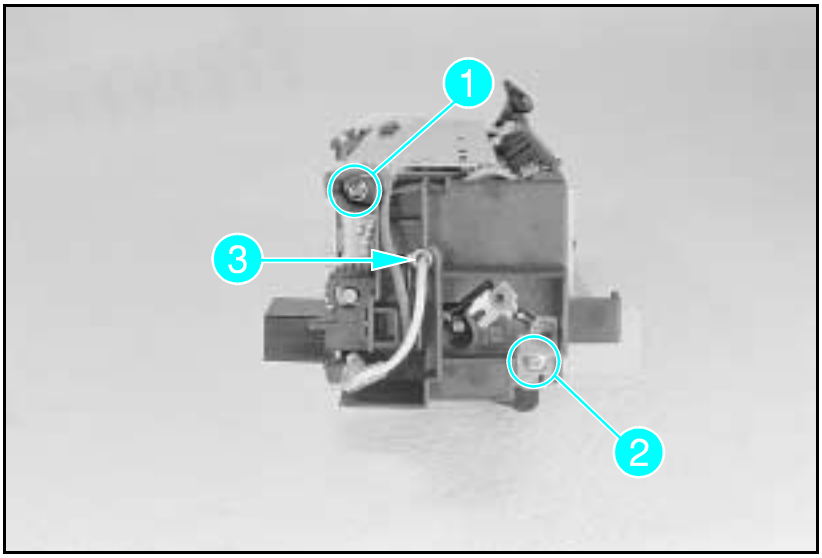

Figure 1-45 **Fuser Gear Cap Removal**

Note Before removing the gear cover, note the routing of the wires in the gear cover slots.

9 Remove the (2) screws from the right side gear cover (see Figure 6-45, callouts *1 and 2*). Note the wavy washer on the (1) screw (callout *1*) touching the copper contact. Remove the cover.

10 Remove the Heat Lamp (see Figure 6-45, callout *3*), from the roller. Pull the lamp out the side of the assembly.

Fuser Assembly Thermoswitch Removal

Note Six of the seven latches are accessed from the top of the wire cover. These latches are beneath the felt pad. The slot on the front left side of the wire harness cover is the best place to begin removing the cover.

1. Remove the Wire Harness Cover as shown in Figure 6-42a (LaserJet 4) or Figure 6-42b and c (LaserJet 4 Plus).
2. Remove the (2) screws from the Thermoswitch connector (see Figure 6-46, callout *1*).
3. Release the thermoswitch latch from the paper sensor flag side of the Fuser Assembly (behind the side cover). (See Figure 6-46, callout *2*).
4. Slide the Thermoswitch to the gear side of the fuser and release it from the fuser frame (callout 3).

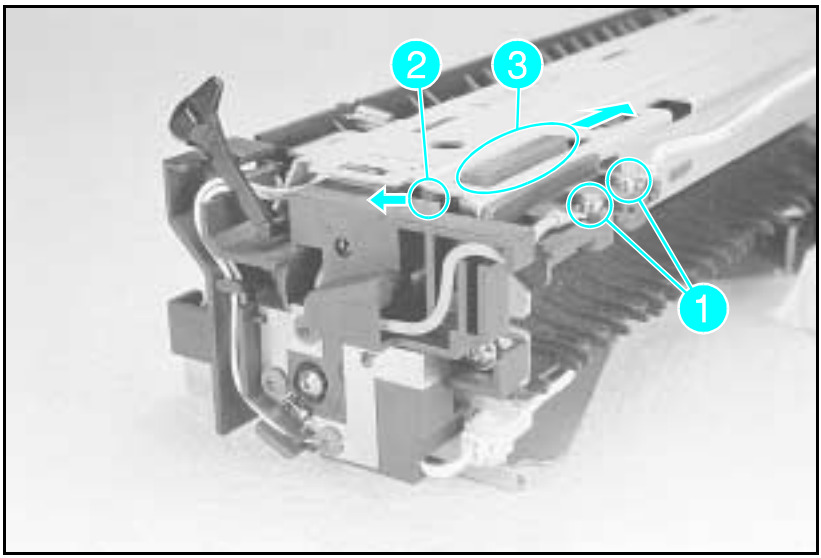

Figure 1-46 Fuser Thermoswitch Connectors

Thermistor Removal

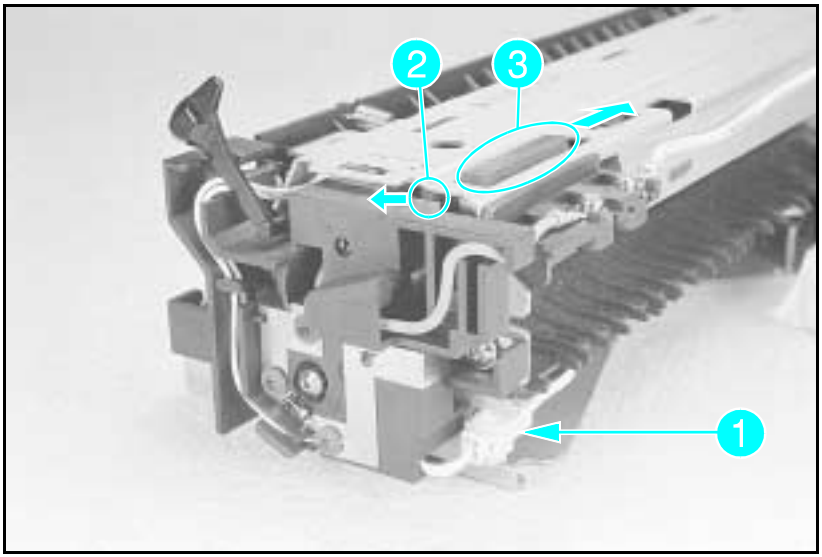

Figure 1-47 Thermistor Connector

1 Remove the Wire Harness Cover as shown in Figure 6-47.
2 Remove the (2) screws from the thermoswitch connector (see Figure 6-47, callout *1*).
3 Release the thermoswitch latch from the paper sensor flag side of the Fuser Assembly (behind the side cover, see Figure 6-47, callout *2*).
4 Slide the thermoswitch to the gear side of the fuser and release it from the fuser frame (callout 3).

Note When installing the thermoswitch, make sure the sensing surface contacts the fusing roller uniformly. If it does not, straighten the leaf spring.

(continued on next page)

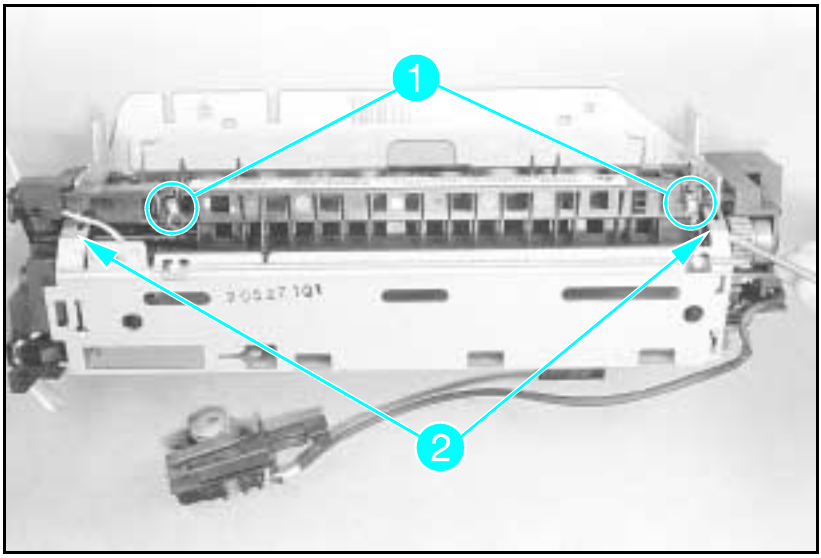

Figure 1-48a Upper Fuser Frame Removal (LaserJet 4)

5 Release the (2) springs from the Upper Fusing Frame (see Figure 6-48a, callout *1*).

6 Release the tabs that hold the Upper Fusing Frame to the Fuser Body (see Figure 6-48a). Rotate the Upper Frame backwards to release and access the Thermistor (see Figure 6-48b, callout *1*).

(continued on next page)

7 Remove the (1) screw that holds the Thermistor (see Figure 6-48b, callout *2*).

Note Ensure the thermistor cable is routed correctly when assembling the fuser (see Figure 6-47).

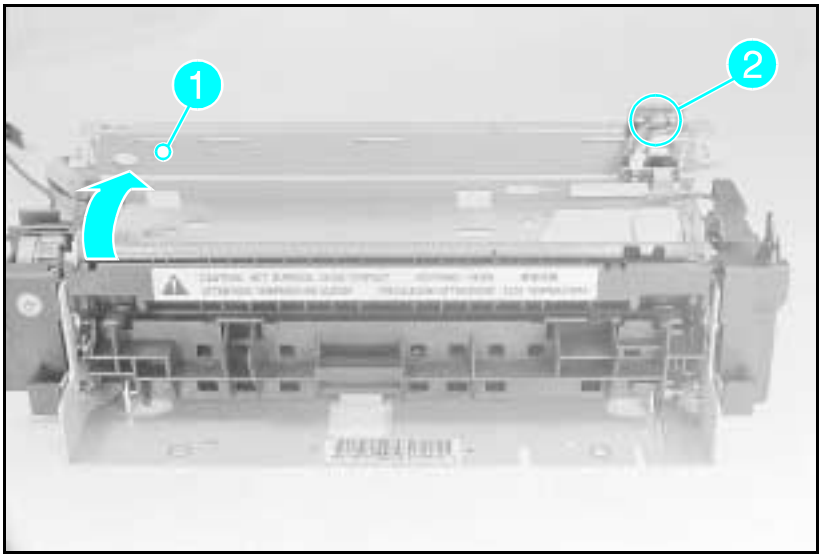

Figure 1-48b Upper Fuser Frame Removal (LaserJet 4 Plus)

Paper Control PCA Removal

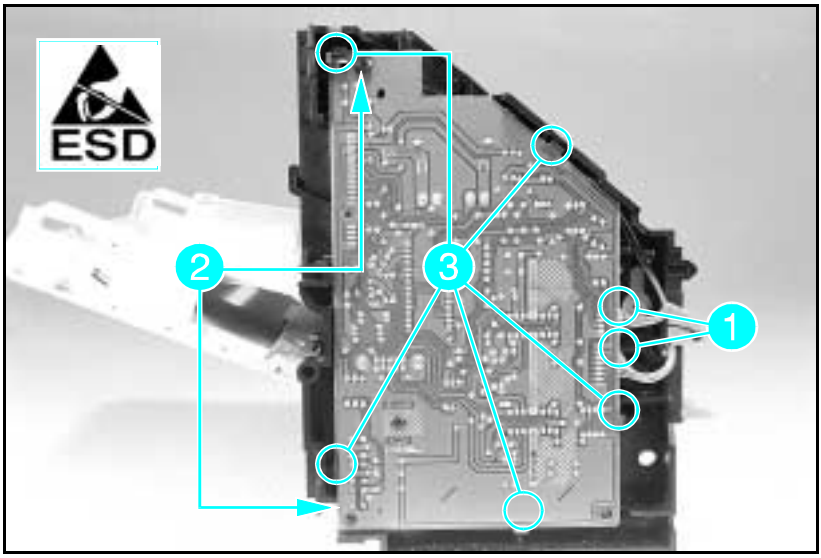

Figure 1-49 **Paper Control PCA Retaining Screws and Latches**

1 Remove the Right Side, Top, Left Side, and Font Door Covers, then Paper Feed Assembly.

2 Disconnect the cables from the sensors (see Figure 6-49, callout *1*).

3 Remove the (2) self-tapping screws from the Paper Control PCA (see Figure 6-49, callout *2*).

4 Release the (5) latches that retain the Paper Control PCA (see Figure 6-49, callout *3*).

Sensor PCA Removal

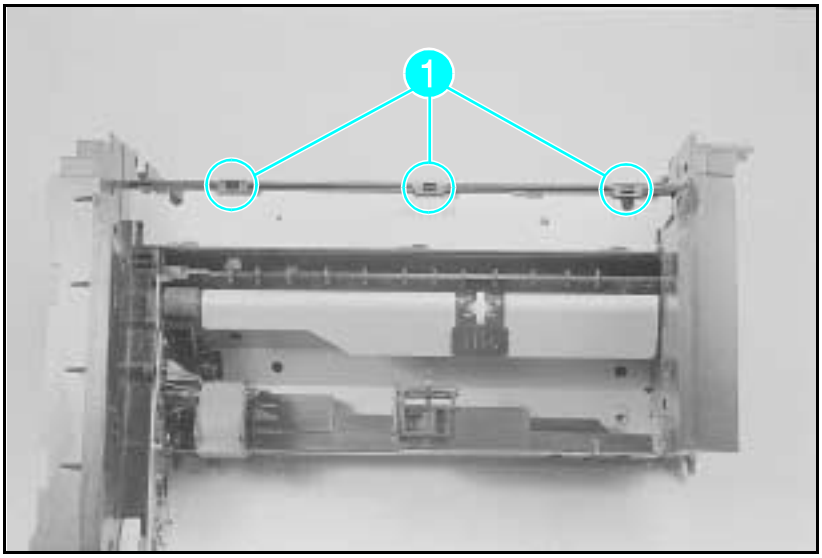

Figure 6-50 Sensor PCA Removal

1. Remove the Right, Left, Top, and Font Door covers. You need not remove the MP Tray.
2. Perform the Paper Control PCA removal procedure, as shown in the preceding section.
3. Disconnect the connectors for SL1, SL2, and M2 from the left end of the Sensor PCA.
4. Release the (3) clips that hold the Sensor PCA cover. Remove the cover (see Figure 6-50, callout *1*).
5. Remove the Sensor PCA by sliding it to the left and dropping it down.

PS1 and PS2 Sensor Assembly Removal

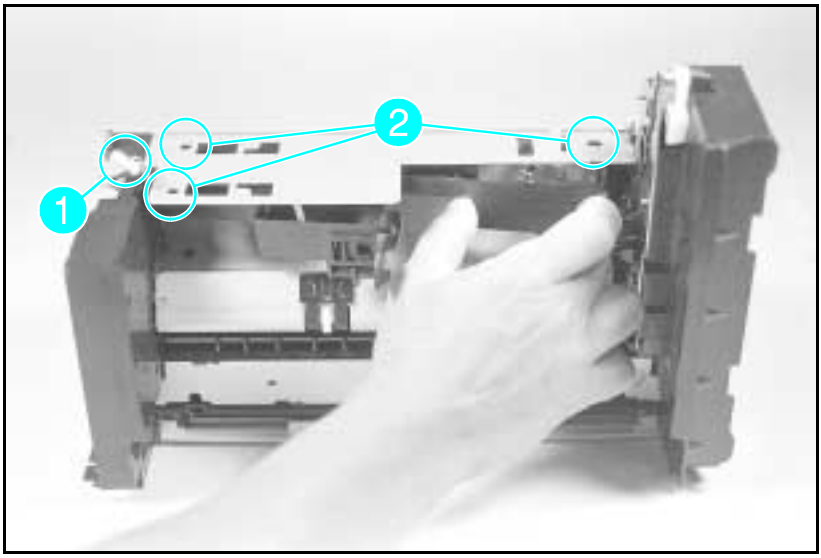

Figure 6-51 Removing the PS1/PS2 Sensor Assembly

The PS1 and PS2 sensors are located under the Paper Feed Assembly.

1 Remove the Paper Feed Assembly and place it on a flat surface, with the MP Tray side down.

Note You need not remove the MP Tray from the Paper Feed Assembly. Use a cloth to protect the MP Tray door from scratches.

2 Remove the PC Tray Pickup Roller.
3 Disconnect blue-wired connector on the bottom, (callout *1*).
4 Remove the center pin from the dowel post.
5 Flex the right side of the Sensor Assembly to clear the locator pin and the sensor arm from the sheet metal (see Figure 6-51 callout *2*).
6 As you flex the right side of the assembly, carefully release the (2) plastic retaining tabs on the left (Figure 6-51 callout *2*).
7 Slide the Assembly to the right to clear the mounts.

Note When installing the Sensor Assembly, ensure the sensor flags are free through their entire range of travel.

High Voltage Contact Plate (HVCP) and Paper Guide Removal

This procedure involves removing many subassemblies and difficult disassembly processes. Because this procedure is complex, it is separated into three sections:

- Accessing the HVCP and Feed Guide Assembly.
- Removing the HVCP and Feed Guide Assembly.
- Replacing the HVCP and Feed Guide Assembly.

Allow plenty of time to perform this procedure, and be careful not to damage any parts during reassembly.

Accessing the High Voltage Contact Plate and Feed Guide Assembly

Accessing the High Voltage Contact Plate and Feed Guide Assembly requires prior removal of the following:

- Top Cover
- Right Side Cover
- Left Side Cover
- Paper Feed Assembly
- Toner Cartridge
- Fuser Assembly
- Transfer Roller

(continued on next page)

After removing the Fuser Assembly, remove the contact plate from the rear of the printer, as follows:

1. Remove the (1) screw from the sheet metal Guide Plate Cover. (This screw is behind the Fuser Assembly, see Figure 6-52, callout *1*).
2. Remove the Guide Plate Cover by freeing the front edge, lifting upward, and sliding the cover out the rear of the printer.

Note Do not lose any of the (6) rollers the Guide Plate Cover holds in place.

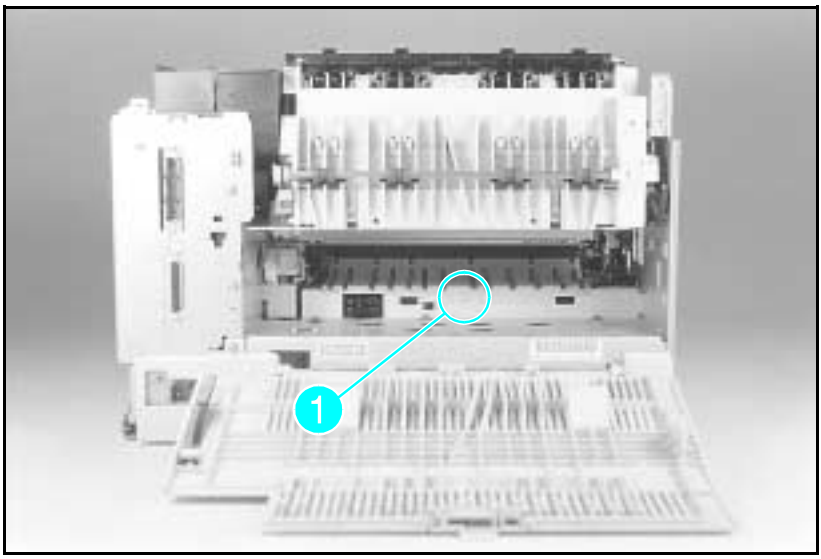

Figure 6-52 Guide Plate Cover Screw

(continued on next page)

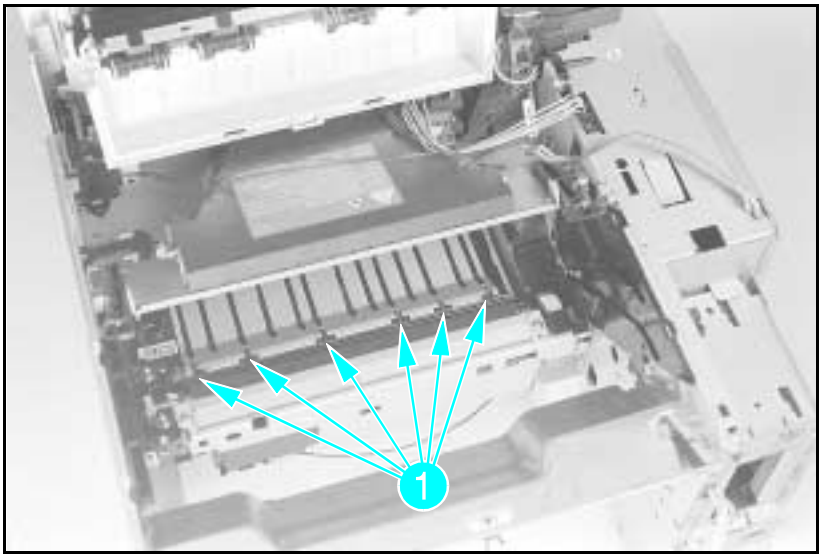

Figure 6-53 Paper Guide Rollers

3 Remove the (6) rollers from the High Voltage Contact Plate (see Figure 6-53 callout *1*).

(continued on next page)

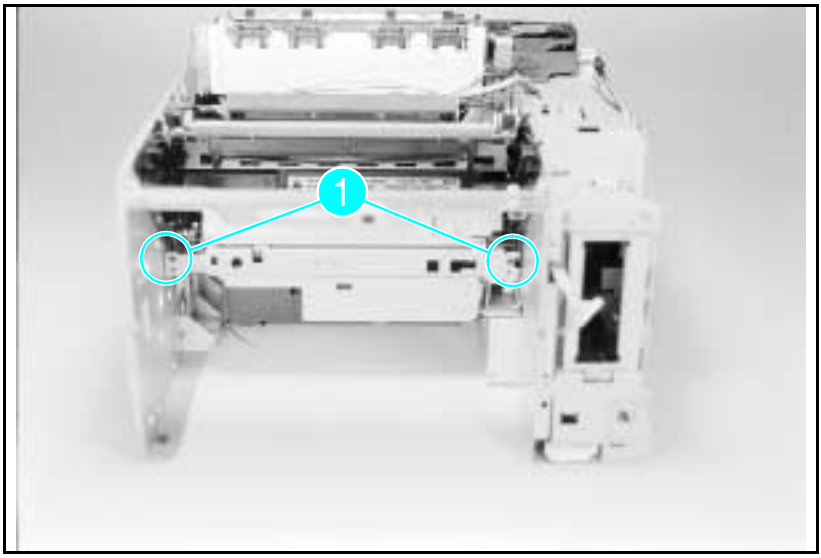

Figure 6-54 Cross Member Screws

4 From the front of the printer, remove the (2) black self-tapping screws that hold the Inner Cross-member. Remove the cross-member (see Figure 6-54 callout *1*).

(continued on next page)

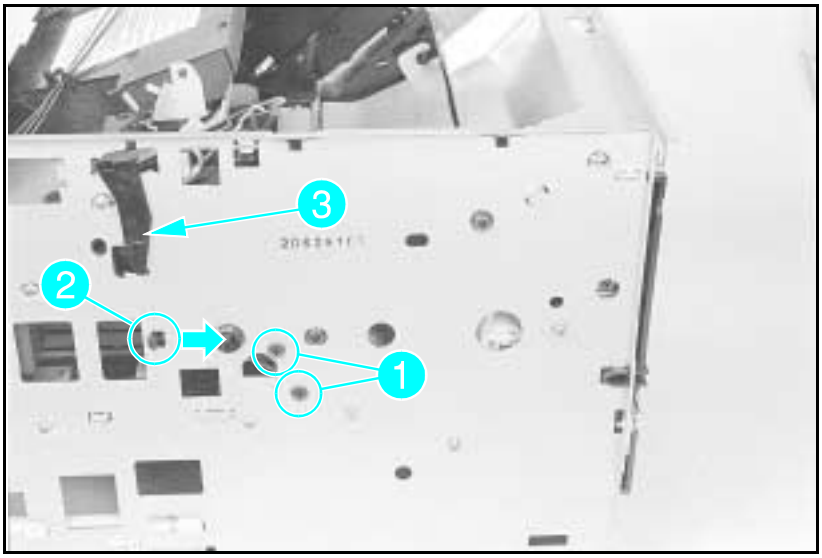

Figure 6-55 Left Toner Cartridge Guide Plate Screw

5 From the left side of the printer, remove the (1) or (2) black, self-tapping screw(s) that holds the Left Toner Cartridge Guide Plate (see Figure 6-55, callout *1*).

6 Release the guide plate latch (see Figure 6-55, callout *2*).

7 Remove the Laser Shutter Pivot Pin from its seat in the Left Toner Cartridge Guide Plate (see Figure 6-55, callout *3*).

These two steps (5 & 6) are required for the next stage of the HVCP removal process.

Removing the High Voltage Contact Assembly and Feed Guide Assembly

Note The following procedures are difficult and the components are damaged easily. The tolerances between the parts are close and several attempts may be necessary before the procedure is complete.

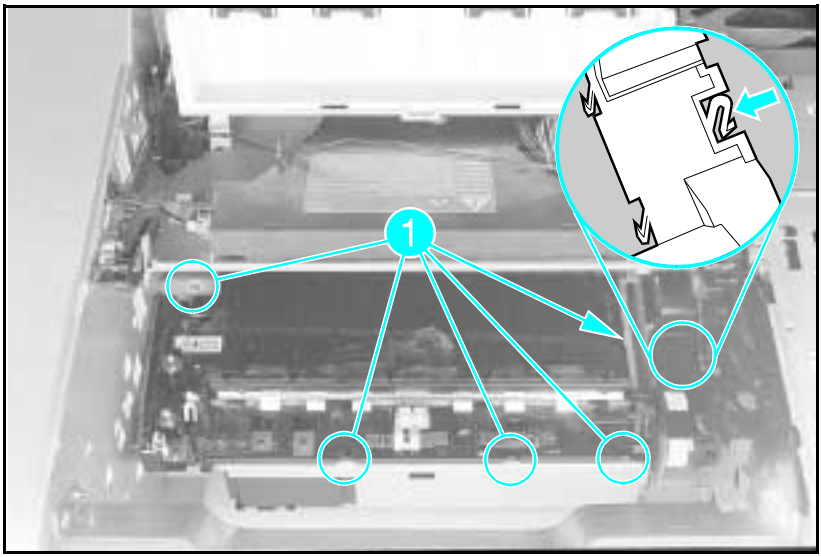

Figure 6-56 **High Voltage Contact and Feed Guide Assembly Latches**

1. Perform all the steps of "Accessing the High Voltage Contact Plate/Feed Guide Assembly" in the order given.
2. Press the tab shown in Figure 6-56 to release the gear cover.
3. Release the (5) latches that hold the Contact Plate in place (see Figure 6-56). Set the Contact Plate on the latch slots.
4. Free the Left Toner Cartridge Guide Assembly from its retainers.
5. Lift the Contactor Plate and the Toner Cartridge Guide Assembly out of the printer, Toner Cartridge Guide Assembly first.

Replacing the High Voltage Contact Assembly/Feed Guide Assembly

The Toner Cartridge Guide Plate and the High Voltage Contact Assembly/Feed Guide Assembly must be installed together. Allow plenty of time to perform this procedure because several iterations of the process may be necessary.

1. Set the contact assembly over its mounting holes.
2. Slide the Toner Cartridge Guide Plate into position on a diagonal line (see Figure 6-57).
3. Working the two parts together, lift the rear of the HVCP to provide enough clearance to install the Guide Plate.
4. When the Guide Plate is in position, press it into place on the sheet metal.
5. Press the HVCP into its mounting slots.
6. Install the Laser Shutter Pivot Pin and test the Laser Shutter for free operation.
7. Replace the gear cover (see Figure 6-56).

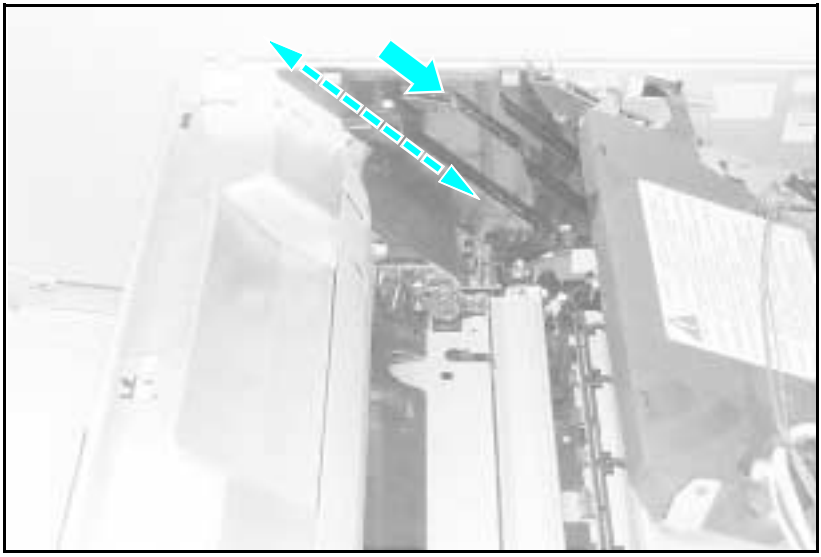

Figure 6-57 Orientation of HVCP and Left Guide Plate

Interconnect PCA Removal

The Interconnect PCA is a connector board that connects the Power Supply and the DC Controller with the the Fuser Assembly. The Fuser Assembly connects directly into the Interconnect PCA. The Power Supply and the DC Controller have wiring harnesses that connect them to the Interconnect PCA.

Note Re-assembly of the the Interconnect PCA *requires* a small tie-wrap. Be sure to have a tie-wrap available before beginning the disassembly.

Remove the interconnect as follows:

1. Remove the Formatter Cage, the Power Supply, the Fuser Assembly, the High Voltage Power Supply, and the Rear Door.
2. Remove the (1) screw from the right-side PC tray Rail Cover (see Figure 6-58, callout *1*).
3. Release the latch (see Figure 6-58, callout *2*), slide the Rail Cover to the rear of the printer and remove the cover.

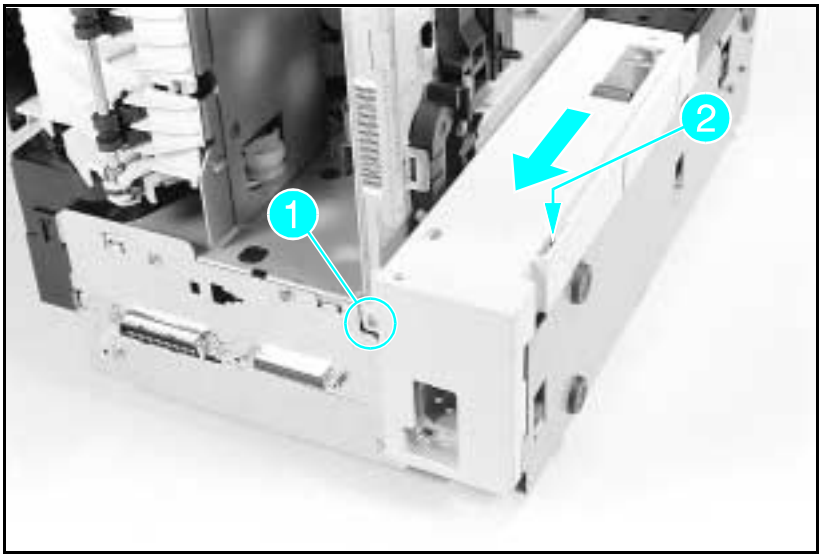

Figure 6-58 Right Side PC tray Rail Cover (printer on right side)

(continued on next page)

Note Access the Interconnect PCA Housing by laying the printer on the rear of the printer chassis.

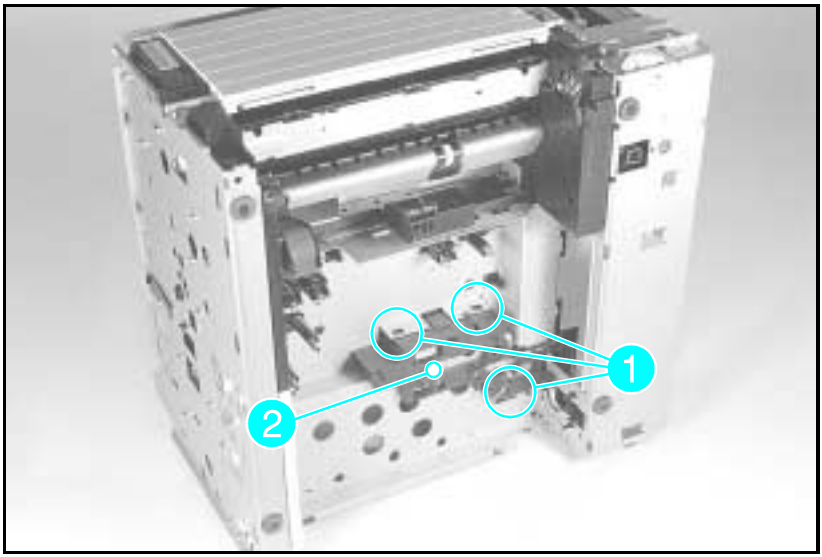

Figure 6-59 Interconnect PCA latches and AC Connector Mounting Pins

4 Disconnect the Interconnect Cable connector from the DC Controller (J210 on LJ4, J213 on LJ4+/5). Remove the cable from its retainer.

5 Release the bottom or rear-most latch (see Figure 6-59), callout 1) holding the arm of the Interconnect PCA housing to the sheet metal.

6 Rotate the bottom (rear) of the PCA housing up (toward the front) to release the housing from the printer.

(continued on next page)

Note The AC Connector has polarity. Note the orientation of the AC Connector before removing it. This is *required* in order to install the connector with the same polarity during assembly (see Figure 6-60).

7 Release the AC Connector from the sheet metal with needle-nose pliers. **Service Hint:** Use a 5mm nut driver to press the AC Connector retaining pins from the sheet metal.

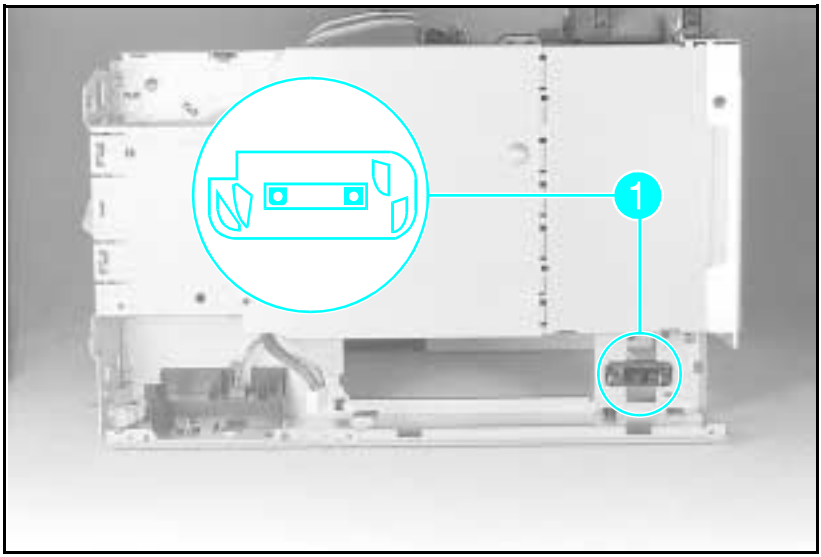

Figure 6-60 Correct Orientation of AC Connector (Notch at Upper Left)

LaserJet 5 Error Map

The LaserJet 5/5M/5N printer has error messages that are similar to the LaserJet 4/4M/4+/4M+. Use the following table to look up the LJ5 error and take the recommended action. If the recommendation is to see another error, for example See 00 POWERSAVE, look up the recommendation for that error in the Printer Message Troubleshooting section (Tables 7-1 and 7-2).

Note The LaserJet 5 printer's Go key replaces both the Online and Continue keys previously used to resolve some of the temporary errors in the LaserJet 4 and 4 Plus printers.

Note For any LaserJet 5 error message preceded with a number from 20 through 81, look up the equivalently-numbered message in Table 7-1 and proceed as directed.

Message on LJ 5/5M/5N	Recommendations
CLEARING MEMORY	See 07 RESET
CLOSE PRINTER COVER	See 12 PRINTER OPEN
CONTINUOUS TEST, PRESS JOB CANCEL KEY	See 04 SELF TEST
DATA RECEIVED	The received data is waiting for a form feed. (Takes the place of the Form Feed indicator on the LJ4.)
ENGINE TEST	See 15 ENGINE TEST
FACTORY DEFAULTS BEING RESTORED	See 09 MENU RESET
INCOMPATIBLE ENVELOPE FEEDER INSTALLED	Indicates that an envelope feeder has been installed that is not compatible with the LJ5. Press GO to clear the error. The feeder will not appear in any control panel or PJL messages.

Message on LJ 5/5M/5N	Recommendations
INCOMPATIBLE TRAY 3 INSTALLED	Indicates that a lower cassette has been installed that is not compatible with the LJ5. Press GO to clear the error. The tray will not appear in any control panel or PJL messages.
INITIALIZING (powerup only)	See 05 SELF TEST
INSTALL TONER CARTRIDGE	See 14 EP CART
INSTALL TRAY 2	See PC INSTALL
INSUFFICIENT MEMORY, JOB CLEARED	See W3 JOB ABORTED
INSUFFICIENT MEMORY, PRINTING AT 300 DPI	See W4/7 JOB 300/[page protect size]
MANUALLY FEED [envelope size]	See ME FEED [envelope size]
MANUALLY FEED [paper size]	See MF FEED [paper size]
MEMORY LOW, PAGE SIMPLIFIED	See W1 IMAGE ADAPT
MEMORY SETTINGS CHANGED	See WM MEM CNFIG N/A or WM CHK MEM CNFIG
OFFLINE	See 00 OFFLINE
[personality] MEMORY FULL, STORED DATA LOST	See WM [Personality] MEM FULL
PLEASE WAIT	This message is displayed whenever the device is in the process of flushing the pipeline so it can go offline or into the menus. (Takes the place of the flashing Online indicator.)
POWERSAVE ON	See 00 POWERSAVE
PRINTING CONFIGURATION PAGE	See 05 SELF TEST / 06 PRINTING TEST
PRINTING DEMO PAGE	See 06 DEMO PAGE
PRINTING FLASH PAGE	This message is displayed while a flash file system page is being formatted and printed. Upon successful completion, the device returns to an online and ready state.
PRINTING FONT LIST	See 06 TYPEFACE LIST
PROCESSING JOB	This message is displayed whenever the device is actively processing a user's job. (Takes the place of the flashing Ready indicator.)
READY	See 00 READY
REMOVE DUPLEX JAM	See 13 DUPLEX JAM

Message on LJ 5/5M/5N	Recommendations
REMOVE PAPER JAM	See 13 PAPER JAM
REQUESTED LANGUAGE NOT AVAILABLE	See W2 INVALID PERS
RESETTING ACTIVE I/O	See 07 RESET
RESETTING ALL I/O	See 07 RESET
RESTORING FACTORY SETTINGS	See 08 COLD RESET
TONER LOW	See 16 TONER LOW
TRAY 2/3 EMPTY	Indicates Tray 2 or 3 has run out of paper and has not been selected as the current job's paper source. If the problem persists, check for a binding sensor flag or replace the appropriate sensor.
TRAY x LOAD [paper or envelope size]	See xx LOAD [paper or envelope size]
WARMING UP	See 02 WARMING UP
x LOAD [envelope size] x=Tray 1 or Envelope Feeder	See xx LOAD [paper or envelope size]

7

Troubleshooting

Pre-Troubleshooting Procedures

Preliminary Operating Checks

Prior to troubleshooting a specific printer problem, you should ensure that:

- The printer is being maintained on a regular basis as described in Chapter 4.
- The customer is using acceptable media as specified in the User's Manual.
- The printer is installed on a solid, level surface.
- The line voltage does not vary more than 10% from the nominal rated value as specified on the Power Rating Label.
- The operating environment for the printer and paper is within the temperature and humidity specifications listed in Chapter 1 of this manual.
- The printer is never exposed to ammonia fumes such as those produced by diazo copiers, or office cleaning materials.
- The printer is not exposed to direct sunlight.
- Non-HP components (such as refilled toner cartridges, font cartridges, and memory boards) are removed from the printer.

Printer Message Troubleshooting

Printer Message Summary Table

Table 7-1 is a list of all status, attendance, error, and service messages affecting the printers. The table also identifies the action required to correct the situation identified by the message. When the action requires removal and replacement of an assembly or PCA, refer to the applicable section of Chapter 6 for instructions. For general location of components, refer to *Troubleshooting Aids* at the end of this chapter.

Table 7-1 Printer Messages

Message	Symptoms and Recommendations
Blank Display	Refer to the “Blank Display” Table 7-3.
00 READY	Proceed; printer is ready to use.
00 POWERSAVE POWERSAVE ON	Printer is in Power Save Mode. Press any key to take printer out of Power Save mode. Receipt of data or an error condition will also take printer out of Power Save mode. The job will print when the fuser is warmed up (may take up to 45 seconds).
00 OFFLINE	Printer is off line and not able to receive data. Press On Line*.
02 WARMING UP	Wait until printer signals ready.
05 SELF TEST	The non-printing portion of Self Test is in progress. Wait for the printer to display the 00 READY message.
06 PRINTING TEST PRINTING CONFIGURATION PAGE	Self Test printing. Wait for the printer to display the 00 READY message.
06 TYPE PRINTOUT	Printing sample characters from available typefaces. Wait for the printer to display the 00 READY message. (Note: the format is different for PCL and PostScript.)
06 TYPEFACE LIST PRINTING FONT LIST	Printing a Typeface List. (Note that PCL/Postscript formats are different.)
06 DEMO PAGE PRINTING DEMO PAGE	Printing a Demonstration Page. (Note that PCL/Postscript formats are different.)
06 CONFIG PAGE	Printing a Configuration Page. Appears only with PostScript installed in the printer.

*Press Go on the LJ5.

Table 7-1 Printer Messages (continued)

Message	Symptoms and Recommendations
07 RESET RESETTING [xxx]	Returns all printer settings to Printing Menu settings, and clears buffered pages, temporary soft fonts, and macros. Wait for the printer to display the 00 READY message. See the *Reset Menu* section in Chapter 3 for more details.
08 NVRAM_INIT	Printer is initializing non-volatile RAM. This allows other personalities to access non-volatile RAM.
08 COLD RESET RESTORING FACTORY SETTINGS	Returns both Configuration and Printing Menu selections to the factory settings. Ensure that the Configuration Menu settings are correct before placing the printer on-line. Wait for the printer to display the 00 READY message. See the *Reset Menu* section in Chapter 3 for more details.
RESET=MENU 09 MENU RESET 09 RESET ACTIVE I/O 09 RESET ALL I/O FACTORY DEFAULTS BEING RESTORED	Follows a Control Panel Reset selection. The printer returns all Printing, PCL, PS, and Job Menu items to the factory settings. Clears buffered page data, temporary soft fonts, and temporary macros. See Chapter 3 for more details.
10 RESET TO SAVE	The Printing, PCL, PS, and Config Menus were changed while data, temporary fonts, or temporary macros were present in printer memory, or while the printer was in the middle of a job. Press Continue* or On Line*. Your changes remain recorded in the menu but do not become active until the printer is reset, or the job boundary is detected.
12 PRINTER OPEN CLOSE PRINTER COVER	Close the Top Cover Assembly. If the problem continues, refer to the "12 PRINTER OPEN Message" section.
13 PAPER JAM REMOVE PAPER JAM	Open printer and clear any paper within the printer. Press Continue* or On Line* to reprint the page. If the problem persists, refer to "13 PAPER JAM Message" section.
13 DUPLEX JAM REMOVE DUPLEX JAM	Check for any paper in the Duplexer area. If problem persists, refer to the Duplex Section (Appendix A).
14 NO EP CART INSTALL TONER CARTRIDGE	Ensure that the Toner Cartridge is installed correctly (fully seated into the printer). Try a new Toner Cartridge. If the problem continues, refer to the "14 NO EP CART Message" section.
15 ENGINE TEST	This message is displayed during the execution of a print engine self-test. When this test is complete, the printer returns to the ready state, but remains off line.
16 TONER LOW	The toner cartridge is almost empty. Replace the Toner Cartridge. Although you can continue to print for a short while, make sure that the print quality does not degrade past the acceptable level. If the problem continues, refer to "16 TONER LOW" Message" section.

*Press Go on the LJ5.

Table 7-1 Printer Messages (continued)

Message	Symptoms and Recommendations
18 AUX IO INIT	This message is displayed when the MIO (AUX IO) card is in the process of initializing. During initialization the MIO is not active, but since the printer supports I/O switching, the printer remains on line and this becomes a status message. Display clears automatically (this may take up to a minute, depending upon the card).
18 AUX IO NT RDY	The MIO (AUX IO) card is not ready. See the user's manual for the MIO card. The serial and Bi-Tronics parallel ports continue to operate normally. To clear the display, you must remove the card, and power-cycle the printer. The Continue* key does not clear the display.
18 MIO INIT	The MIO card is initializing. This is a status message. During initialization the MIO is not active, but since the printer supports I/O switching, the printer remains on line. Displays clears automatically (may take up to a minute, depending on the card).
18 MIO NOT READY	The MIO card is not ready or not connected to a working network. The serial and Bi-Tronics parallel ports will continue to operate normally. To clear the display, switch the printer OFF, remove the card and switch printer ON. Continue* will not clear the display. See MIO documentation for troubleshooting.
20 MEM OVERFLOW 20 INSUFFICIENT MEMORY	Indicates a memory overflow. Too much data is being sent to the printer and the printer has run out of memory. Pressing the Continue* key causes the printer to print only the information it received. If the error persists, it may be necessary to *simplify* the print job (such as fewer fonts and less graphics information), or have the customer purchase additional memory.
21 PRINT OVERRUN 21 PAGE TOO COMPLEX	Indicates that the information being sent to the printer is too complex for the printer (the formatting capabilities of the printer cannot keep up with the formatting instructions being sent to it by the computer). If the error persists, it may be necessary to *simplify* the job (reduce the number of characters, number of fonts used, number of pixels addressed, cursor repositions, or reduce addressing the same pixel location multiple times). This problem can also be resolved by adding at least one additional memory PCA, and setting PAGEPROTECT=[LTR, LGL, or A4], if applicable.

*Press Go on the LJ5.

Table 7-1 Printer Messages (continued)

Message	Symptoms and Recommendations
22 ERROR 22 SERIAL I/O ERROR 22 PARALLEL I/O ERROR 22 HP MIO ERROR	For serial/Bi-Tronics parallel configuration, the computer and printer are not communicating because of improper signal protocols. This is an I/O buffer overrun error. Parallel configuration: may mean a loose cable connection. Serial configuration: wrong pacing option may be selected. (If you are using an RS232 serial connection, the HP LaserJet printer uses XON/XOFF and DTR signal protocols rather than ENC/ACK protocol.) Press Continue* to clear the error message (data is lost).
40 ERROR 40 BAD SERIAL DATA FORMAT 40 HP MIO ERROR	The printer encountered an error while transferring data from the computer. For serial I/O configuration, the error may have occurred because you turned ON or OFF your computer while the printer was on line, or your printer's baud rate or parity was not the same as the computer's. For network MIO cards, this means there was an abnormal connection break. Make sure the printer is set at the same baud rate as the computer. Press Continue* to clear the error message. For network MIO cards, see the user's manual for your card.
41.[X] ERROR 41.x PRINTER ERROR x=1, 2, 4 ,5	A temporary error occurred while printing. Press the Continue* key to clear the error. If the error persists, refer to "41.X ERROR Message."
41.3 ERROR 41.3 UNEXPECTED PAPER SIZE	The paper size selection knob or MP paper size does not match the installed paper or more than one sheet of paper was picked up.
50 SERVICE 50 FUSER ERROR	Power OFF the printer for a minimum of 10 minutes. If the problem continues, refer to the "50 SERVICE error" section.
51 ERROR 51 PRINTER ERROR	Indicates loss of laser beam for over 2 seconds. Press Continue* to clear this error. If the error persists, refer to the "51 ERROR Message" section.
52 ERROR 52 PRINTER ERROR	Indicates scanner motor is unable to maintain the proper speed. Press Continue* to clear this error. If the error persists, refer to the "52 ERROR Scanner Malfunction" section.

*Press Go on the LJ5.

Table 7-1 Printer Messages (continued)

Message	Symptoms and Recommendations
53.XY.ZZ ERROR	An error occurred during configuration and validation of SIMM memory: **X Hardware Type:** 0:ROM 1:RAM 2:Flash **Y Hardware Device:** 0: Internal Memory 1: SIMM Slot 1 2: SIMM Slot 2 3: SIMM Slot 3 4: SIMM Slot 4 **ZZ Error Number**: 0: Unsupported Memory 1: Unrecognized Memory 2: Unsupported Memory Size 3: Failed RAM Test 4: Exceeded Maximum RAM Size 5: Exceeded Maximum ROM Size 6: Invalid SIMM Speed 7: SIMM Reporting Information Incorrectly 8: SIMM RAM Parity Error **LaserJet 4/4m only** 9: SIMM ROM Needs To Be Mapped To An Unsupported Address 10:SIMM Address Conflict 11:PDC XROM out of bounds 12:Could not make a temporary mapping Replace the SIMM device that caused the error. Pressing Continue* allows you to continue but the SIMM device that caused the error is not configured. If the SIMM device has more than one bank of memory, the good banks are configured.

*Press Go on the LJ5.

Note Refer to the "Product Family Compatibility Matrix" in Chapter 1, or for the LaserJet 5, Appendix B to verify correct memory for the printer.

Table 7-1 Printer Messages (continued)

Message	Symptoms and Recommendations
55 ERROR 55 PRINTER ERROR	Indicates a communications problem between the DC Controller PCA and the Formatter PCA. Pressing Continue * clears the error and resumes printing. Perform the Test Print operation to verify DC Controller functionality. If the message persists, check for any cable damage, and check the DC voltages, or replace the DC Controller.
57 SERVICE 57 MOTOR FAILURE 57.1 SERVICE	This message indicates that a main motor failure occurred. Power cycle the printer. If the error persists, first check the connections at the main motor and DC Controller, then replace the main motor to clear the error. See "57 (or 57.1) SERVICE message.
58 SERVICE 58 FAN MOTOR FAILURE 57.2 SERVICE	This errors indicates the DC Controller detects an exhaust fan failure in either the printer or the optional duplexer. See the "58 (or 57.2) SERVICE" section for more information.
61.[x] SERVICE X=0 - 4	Printer encountered a parity error when accessing the RAM memory SIMM in slot "X". If X=0, the faulty SIMM slot was not detected. Turn OFF the printer, then back ON. (Data stored in printer is lost.) If the error is still present, Turn OFF the printer and verify that the indicated SIMM is correctly installed. Turn ON the printer . If the error is still present, turn OFF the printer, and remove the SIMM board. Turn ON the printer. If the error message does not appear, the problem is on the SIMM board; if the error still appears, the problem is in the printer's internal memory.
62.[x] SERVICE x=0 - 5	Printer identified a problem while checking its memory. "X" refers to the device the printer was checking when it encountered the error. 0: Internal Memory 1-4: SIMM Slot 5: Cartridge If the printer contains a SIMM memory board, turn OFF the printer. (Data stored in printer is lost.) Verify that the SIMM is installed correctly, and turn ON the printer. If the error is still present, turn OFF the printer, and remove the SIMM board. Turn ON the printer. If the error message does not appear, the problem is on the SIMM board.
63 SERVICE 63 NEEDS SERVICE	The printer found a problem in its internal RAM memory. Switch OFF the printer, and then switch ON. (You lose any data stored in the printer.) If the problem persists, replace the Formatter PCA.

*Press Go on the LJ5.

Table 7-1 Printer Messages (continued)

Message	Symptoms and Recommendations
64 SERVICE 64 PRINTER ERROR 65 SERVICE 67 SERVICE	The printer identified an internal service error. If this error appears, turn the printer OFF, and then back ON. If the problem persists, replace the Formatter PCA.
68 ERROR 68 NVRAM ERROR	The printer detected an error in the nonvolatile memory (NVRAM). Press **Continue** *, then check your Control Panel settings. If the problem persists, replace the Formatter PCA.
68 SERVICE 68 NVRAM FULL	The printer's nonvolatile memory is full because new feature sets were installed. Power the printer OFF, then back ON. If the problem persists reinitialize the NVRAM by pressing the **Item** ** key while powering on the printer. Reset the page count, cold reset paper size, display language, and all other applicable control panel settings.
70 SERVICE HP LJ 4+/4M+ Only	A firmware SIMM problem was identified. Remove or replace the firmware SIMM.
71 SERVICE HP LJ 4+/4M+ Only	A firmware SIMM problem was identified. Remove or replace the firmware SIMM.
79 SERVICE [xxxx]	An internal controller error has occurred. Power the printer OFF, then back ON. If this error persists, replace the Formatter PCA. Remove third party memory, if installed. May also be caused by driver or application incompatibilities, or defective toner cartridge.
80 SERVICE [xxxx]	The formatter PCA has been informed of an irrecoverable error by the MIO card. Power cycle the printer. If the error persists, replace the MIO card.
81 SERVICE [xxx]	Formatter manufacturing error. Cold Reset the printer. If the problem persists, replace the Formatter PCA.
EE LOAD [envelope size] ENVELOPE FEEDER [envelope size]	The printer received a request for an envelope size that is not loaded currently in the optional envelope feeder, or the feeder is empty. *Envelope size* may be: COM10, MONARCH, or DL, C5, B5, or ENVELOPE. Load the correct envelope size into the tray, or press **Continue** * to use the size of media installed in the feeder.
FE CARTRIDGE	An accessory cartridge was removed or replaced while the printer was on line. (This message appears even if the cartridge was not used.) Power cycle the printer to clear this message. Ensure that the printer is off line when the cartridge is removed or installed. If a font cartridge is not recognized, verify that it is installed correctly.
FI INSERT CART	An accessory cartridge was removed while the printer was in an error state. To clear this message, insert the cartridge, clear any error conditions, then remove the cartridge.

*Press **Go** on the LJ5. **Press **Job Cancel** on the LJ5.

Table 7-1 Printer Messages (continued)

Message	Symptoms and Recommendations
FR REMOVE CART	An accessory cartridge was installed while the printer was in an error state. To clear this message, remove the cartridge, clear the pending error condition, then install the cartridge.
ME FEED [envelope size] MANUALLY FEED [envelope size]	This message is displayed when there is a request for a manually fed envelope. *envelope size* may be: COM10, MONARCH, DL, C5, B5, or ENVELOPE. Insert the appropriate envelope size into the MP tray (Tray 1), and press On Line* to print.
MF FEED [paper size] MANUALLY FEED [paper size]	This message is displayed when there is a request for manually fed media. *Paper size* may be: LETTER, LEGAL, EXEC, or A4. Insert the appropriate media size into the MP tray, and press On Line* to print, or press Continue* to feed from the Paper Cassette (Tray 2).
PC INSTALL INSTALL TRAY 2	The printer currently has the Lower Cassette or duplexer selected as the paper source, and has detected that the Paper Cassette (Tray 2), which serves as a paper guide for the Lower Cassette, is not installed. Install (reseat) the Paper Cassette.
xx LOAD [paper size or envelope size] TRAY x LOAD [size] ENVELOPE FEEDER [envelope size]	The printer received a request for a paper or envelope size not available in the printer. The xx is MP (Multi-Purpose), PC (Paper Cassette), or LC (Lower cassette). *Paper size* may be: LETTER, LEGAL, EXEC, or A4; for MP tray, *envelope sizes* may be COM10, MONARCH, DL, C5, or B5. Load the correct paper tray and/or media, or press Continue* to use the media in the installed tray(s). The printer continues automatically. If the problem persists, refer to page 7-13.

*Press Go on the LJ5.

Clearable Warnings

A clearable warning indicates a transient condition in the printer. The printer continues on line while the message is displayed in place of 00 READY. A clearable warning appears each time the printer alters resolution or page protection (this causes reconfiguration of memory), or aborts a job due to an invalid or uninstalled personality, or insufficient memory. Clear the message by pressing **Shift** + **Continue** (or **Go** for the LaserJet 5).

Table 7-2 Clearable Warning Messages

Message Displayed	Meaning
W1 IMAGE ADAPT MEMORY LOW; PAGE SIMPLIFIED	The printer received a graphics print file that was too complex to print at the requested resolution. The printer automatically processed the file in the highest resolution possible with the memory installed. Add additional memory to print the file at full resolution. Check the printout for loss of data or print quality.
W2 INVALID PERS REQUESTED LANGUAGE NOT AVAILABLE	The job was not printed because the requested personality, such as PostScript, was not installed. Install the language in which the files are sent, together with enough memory to support that language.
W3 JOB ABORTED INSUFFICIENT MEMORY JOB CLEARED	The printer was forced to abort the print job because there was not enough installed memory to support the printer language used.
W4 JOB 300/OFF W5 JOB 300/LTR W6 JOB 300/A4 W7 JOB 300/LGL	The job was printed at 300 dpi with page protection set as specified in the message. To print the job as requested, install additional memory.
W8 JOB 600/OFF W9 JOB 600/LTR W0 JOB 600/A4	The job was printed at 600 dpi with page protection set as specified in the message. To print the job as requested, install additional memory.
WM MEM CNFIG N/A MEMORY SETTINGS CHANGED	The printer did not have enough memory when switched on to support the previous settings for I/O buffering and /or Resource Saving, probably because you removed a memory SIMM, added a new personality SIMM, or added the optional duplex unit.
WM CHK MEM CNFIG MEMORY SETTINGS CHANGED	I/O Buffering and /or Resource Saving settings were altered when the printer was switched on because the printer did not have enough memory. This usually occurs after memory has been removed from the printer. (You can check settings by printing a self test.)
WM [personality] MEM FULL [personality] MEMORY FULL	The Resource Saving memory area for the specified personality is full. Press CONTINUE * to continue printing (some data will be lost). The current job will print, but some resources (downloaded fonts, etc.) may not be saved. If this error occurs frequently, you may need to adjust Resource Saving settings.

*Press Go on the LJ5.

Printer Message Troubleshooting Procedures

When the following procedures require removing and replacing an assembly or PCA, refer to the applicable section in Chapter 6 for instructions.

Blank Display

Table 7-3 Blank Display

Checks	Action
Is the power on?	1. Check the ON/OFF switch and verify the power is plugged in. 2. Press a Control Panel key to verify problem still exists.
Is the fan working?	1. If the fan is working, check the cabling to the Control Panel. If the cabling is good, replace the Formatter first, then the Control Panel. 2. If the fan is NOT working, measure the DC voltage levels (refer to Table 7-39). If the voltage levels are good from the power supply to the DC Controller and the fan is not working, replace the DC Controller. If the voltage levels are not present at TB1, replace the DC Power Supply.

MP/PC/LC (Tray 1/2/3) LOAD Message

The conditions that result in `MP/PC/LC LOAD` or (`TRAY 1/2/3`) messages are:

- The absence of any input tray.
- The absence of media in either tray.
- The tray size switches may be defective and not recognize the presence of the paper tray. The tray is sensed as the tray-identifier tabs contact one or more of the three tray identifier microswitches.
- The Universal Tray paper size dial setting does not match the installed paper.

The `MP/PC/LC LOAD` message is also generated when the user or software requests a paper size other than that installed.

The Paper Sensing Arms are located in the paper input areas of the printer. During normal operation, the Paper Sensing Arm flags rest on the media installed in the paper tray. The Sensing Arm flags are attached to shafts. The opposite end of the shaft is a photointerrupter that rotates through the sensors on the Paper Control PCA. These sensors are:

- PS4 Paper out-MP tray.
- PS2 Paper out-PC tray.
- PS6 Paper out-Lower Cassette.
- PS7 Paper out-Envelope Feeder.

The presence of paper in the paper tray is sensed by the paper sensor arm. When paper is in the cassette, the sensor arm rests on top of the paper in the tray. At this point, the sensors are not blocked. When the tray is empty, the arm swings through its travel. The photointerrupter attached to the paper sensor arm shaft rotates and blocks the sensor diode.

Table 7-4 "MP/PC/LC (Tray 1/2/3) LOAD" Message Checks

Checks	Action
Is media present in the tray(s).	Install media.
Are the proper trays fully inserted in the printer?	Reseat the cassettes. Make sure each cassette is fully seated into the printer. Ensure that the Universal Paper tray selector knob setting matches the installed paper.
Does the Control Panel's or application's Paper size setting match the tray being used?	Correct the setting to match tray.
Is the expected tray size being recognized by the printer?	Ensure that the image is sized correctly (formatted) for the paper size selected. Proceed to the following cassette size switches functional check. Check switches 603/4/5 if feeding from the PC tray (Tray 1). Check switches 851/2/3 if feeding from the Lower Cassette. see Figures 7-14 and 7-15 for locations.)
Are any of the tray identifier tabs broken on either PC (Tray 1) or LC (Tray 2) paper tray?	Inspect the tray for damage. If damaged, replace the tray.

Cassette Size Switches (SW603, SW604, SW605) Functional Check

Before beginning this test, remove the Lower Cassette Base and the Envelope Feeder. Also, PS2 (PC or Tray 2 Paper Out sensor) must be engaged for this test to be performed reliably. Push PS2 up towards the rear of the printer with your hand.

1. Power ON the printer with the PC tray removed. Wait for the `PC LOAD XXX` message. Set `PAPER=LETTER` in the Printing Menu using the Control Panel.
2. With PS2 engaged, press and hold the lower and upper paper size switches (refer to Table 7-5). The display should read `00 READY`. If the display does not change, the switches are defective. Inspect the switch activating mechanism and/or replace the Paper Control PCA.
3. Repeat the test, this time setting the paper size to legal (`PAPER=LEGAL`) and pressing the top two switches. If the printer responds with `00 READY`, all three switches have been tested and verified.

Note The LaserJet 5 printer will require you to set the paper size, followed by a self test to generate the equivalent `TRAY 2 LOAD` message. Use the **Job Cancel** key between tests to cancel the Self Test printout.

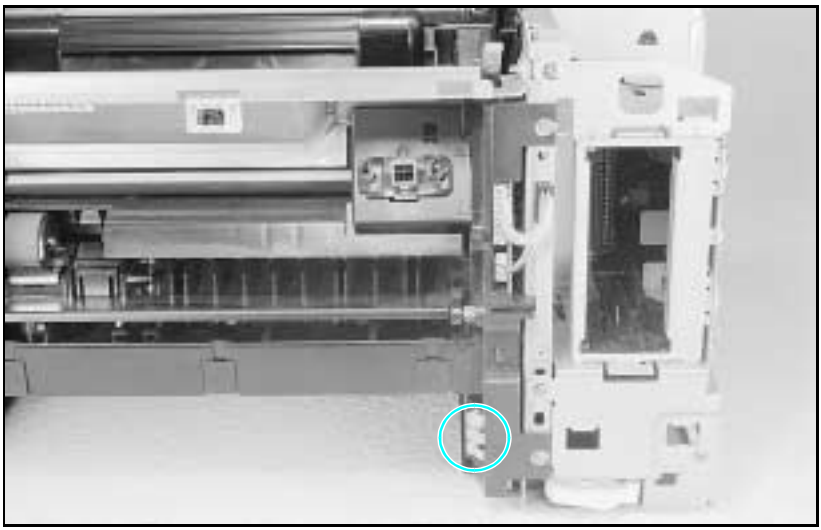

Figure 7-1 PC Tray Size Sensing Microswitches Location

Table 7-5 Switch Logic for Cassette Size

Cassette	Cassette Size Sensing Switch SW603/851 Upper	SW604/852 Middle	SW605/853 Lower
Legal	ON	ON	OFF
Letter	ON	OFF	ON
A4	OFF	OFF	ON
Executive	OFF	ON	ON
No Cassette	OFF	OFF	OFF

Paper Size Sensing Lower Cassette

The operator must set the appropriate paper size for the Lower Cassette using a dial which, in turn, activates switches on the cassette base. This setting is sent to the DC Controller on the serial data bus (SLI). The printer posts a `41.3 SERVICE` error if the media is different from that selected with the switch.

To verify proper operation of the LC (Tray 3) switches, lock out the MP (Tray 1) and PC (Tray 2) trays (in the Config Menu) and perform the same test with Lower Cassette switches as was done for the PC tray (Tray 2) switches.

PC Empty Sensor (PS2) Functional Check

1 Power on the printer with the PC tray (Tray 2) empty.
2 After the `05 SELF TEST` and the `02 WARMING UP` cycles, the `PC LOAD LETTER` (or `A4`) or `TRAY 2 EMPTY` message appears.
3 Add paper to the PC tray and re-install the tray.
4 The display should read `02 WARMING UP`, then `00 READY`. `If the PC LOAD` or `TRAY 2 EMPTY` message persists, replace PS2.

PS4 Check (MP Tray Empty Sensor)

1 With the printer powered ON and `00 READY` displayed, select the Config Menu from the Control Panel.
2 Configure the MP Tray (Tray 1) as a cassette (`MP TRAY=CASS or TRAY 1=CASSETTE`).
3 Lock out the remaining paper trays (`LOCK= PC LC or LOCK TRAY= 2 3`).
4 Remove any paper from the MP Tray (Tray 1). The printer should display an `MP LOAD [paper size]` message. For the LaserJet 5 printer, run a Self Test to generate the `TRAY 1 LOAD` message.
5 Insert paper into the MP Tray (Tray 1). If the `MP LOAD` (`TRAY 1 LOAD`) message persists (or if the load message never occurred), PS4 or the sensor flag is defective.

12 Printer Open Message

The `12 PRINTER OPEN` (or `CLOSE PRINTER COVER`) display tells the operator to close the printer's top cover. The DC Controller detects the Printer Open condition through the position of SW601, which is located on the Paper Feed Assembly PCA . A tab underneath the top cover Door engages SW601 through a slot in the Top Cover Assembly.

In addition to signaling that the top cover is open, SW601 enables the +24B VDC which controls the high voltage for the printing processes, and the AC Voltage for the Fuser Assembly.

Table 7-6 12 PRINTER OPEN Checks

Checks	Action
Is the Top Cover Assembly open?	Ensure the Top Cover Assembly is firmly closed, and that the protrusion that engages the switch actuator is not broken.
With the top cover open, check that the switch actuator does engage the switch.	Use a slim object to manually engage SW601. Listen for a definite "click" as the switch is engaged (see Figures 7-2 and 7-14).
Has the Paper Control PCA on the Paper Feed Assembly been replaced?	SW601 has an actuator that can be deleted during reassembly. Ensure that this actuator is installed correctly.
Is the DC Controller PCA defective?	Measure the 24 VDC on J201, pins 8 and 9 on the DC Controller (see Figures 7-16 and 7-17 for locations). If this 24 volts toggles as SW601 is activated, replace the DC Controller. If it does not, replace the Paper Control PCA or the cable. Also check J201-6 (DOPEN). This voltage should be 5 VDC when the printer is open, and 0 when the printer is closed. If not, replace the DC Controller PCA.

SW601 Functional Check

1 Open the Top Cover Assembly.
2 The message `12 PRINTER OPEN` (or `CLOSE PRINTER COVER`) should appear.
3 Close the top cover. The `02 WARMING UP` message should appear.
4 If the messages do not occur, check the switch actuator (see Figure 7-2, callout 1) on the top cover, and check that the plunger that covers the switch is in place (see also Figure 7-14 for switch locations).
5 Replace the Paper Control PCA.

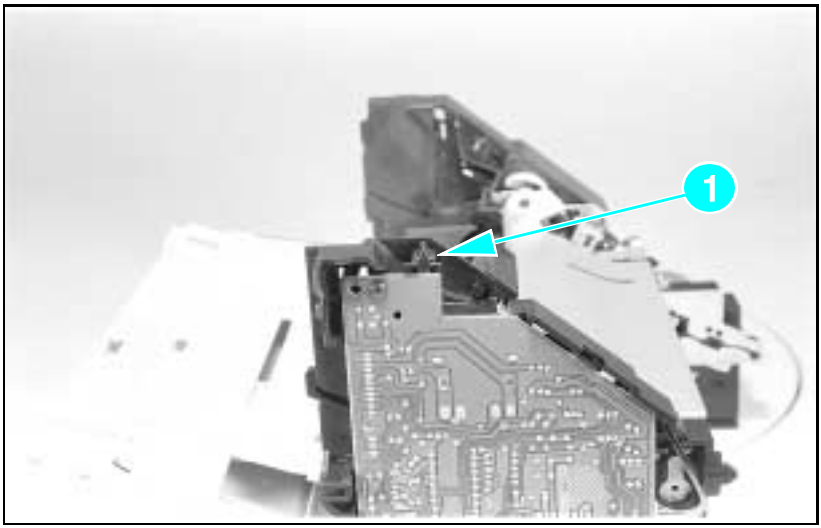

Figure 7-2 Location of the Top Cover Closed (SW601) Actuator

13 PAPER JAM Message

Paper jams occur when paper fails to arrive at or clear the paper path sensors in the allotted time. Paper movement is monitored primarily by two paper sensors. These are described below and illustrated in Figure 7-3).

1 PS1, the Input/Registration Sensor, located in the Paper Feed Assembly.
2 PS3, Exit Sensor, monitors paper in the Fuser Assembly.

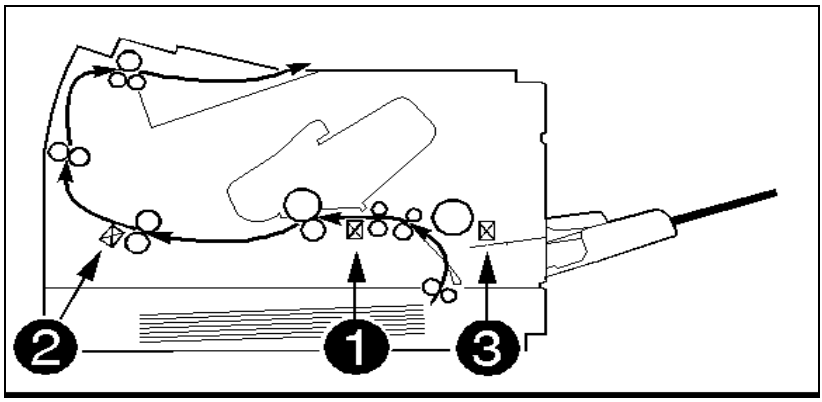

Figure 7-3 PS1 and PS3 (Paper Path Sensors) & PS5 Paper End Sensor

When troubleshooting paper jams, the door associated with the sensor must be opened and closed to clear the jam message. For instance, if PS3 (Exit Sensor) detected the paper jam, and the jam was cleared through a method other than opening the rear door, the message remains in the display until the rear door is opened and closed. Likewise, the top cover must be opened before a jam detected by PS1 is cleared.

The DC Controller monitors these sensors, and detects both the leading and trailing edge of the paper to verify that the paper clears the sensors in the allotted time. If the paper does not arrive at, or clear the sensors in the allotted time, the DC Controller senses a paper jam. The paper jam information is transferred to the Formatter PCA, which displays the `13 PAPER JAM` message.

Note also that if PS5 (MP Tray or Tray 1) Paper End Sensor on the Sensor PCA is bad (Figure 7-3, item 3), a paper jam will be reported when paper is fed from the MP Tray (or Tray 1).

Table 7-7 Paper Jam Troubleshooting Checklist

Jam Location	Checks and Action Required
Input Area Jams (Sensed by PS1.)	1. Check that the Transfer Roller is fully seated and shows no sign of wear. 2. Check that the Toner Cartridge is fully seated. 3. Check that the cassettes are not overfull and the media is loaded correctly. 4. Ensure that the media meets specs. (media is not too smooth or rough), and it has been stored properly. 5. Ensure that the paper tray is fully seated (especially if printing from the Lower Cassette). 6. Ensure that the spring force of the Lower Cassette is set correctly.
Registration Area Jams (Sensed by PS1.)	1. If paper is damaged at the Registration Sensor (PS1), check that the Transfer Charge Roller is properly seated.
Lower Cassette Paper Jams (Sensed by PS1.)	1. The LC Tray (Tray 3) is not fully seated into the printer. Seat the LC Tray firmly into the printer. 2. The Lower Cassette feed pressure (spring force) adjustment is incorrect. Set the spring force as shown in Chapter 3.
Fuser Assembly Jams (Sensed by PS3.)	1. Check that the Fuser Pressure Roller Levers are down (LJ4 and 4 Plus Only). 2. Check that the Exit Sensor Arm (PS3) is free throughout its travel and that the Exit Sensor Arm is installed correctly.
False Paper Jams Paper Jam occurs when the last sheet of paper is fed from the tray.	1. PS1, PS3, or PS5 are damaged or mechanically broken. 2. The sensor wires are damaged or disconnected. 3. The rear door is open. 4. Paper out sensors in the paper tray or envelope feeder may be defective, or the sensor flags may be broken or missing. PS2 is the sensor for the PC Tray (Tray 2), PS4 is the sensor for the MP Tray (Tray 1), PS6 is the sensor for the LC Tray (Tray 3), and PS7 is the sensor for the Envelope Feeder.

PS1 (Input/Registration Sensor) Check

1 Power ON the printer *with the top cover open*. Wait for the `12 PRINTER OPEN` (or `CLOSE PRINTER COVER`) message.
2 Engage PS1 by taping it down.
   a For the LaserJet 5, install the toner cartridge.
3 Close the top cover. The `02 WARMING UP` message should display.
4 After the fuser warms up, the main motor should turn on.
5 The `13 PAPER JAM` message appears if the sensor is working correctly.
6 If the `13 PAPER JAM` message does not appear, check that PS1 was fully engaged, then replace PS1.
7 Remove the tape from PS1, install the Toner Cartridge and close the top cover.
8 The display should change from `02 WARMING UP` to `00 READY`. If the `13 PAPER JAM` message persists, replace PS1.

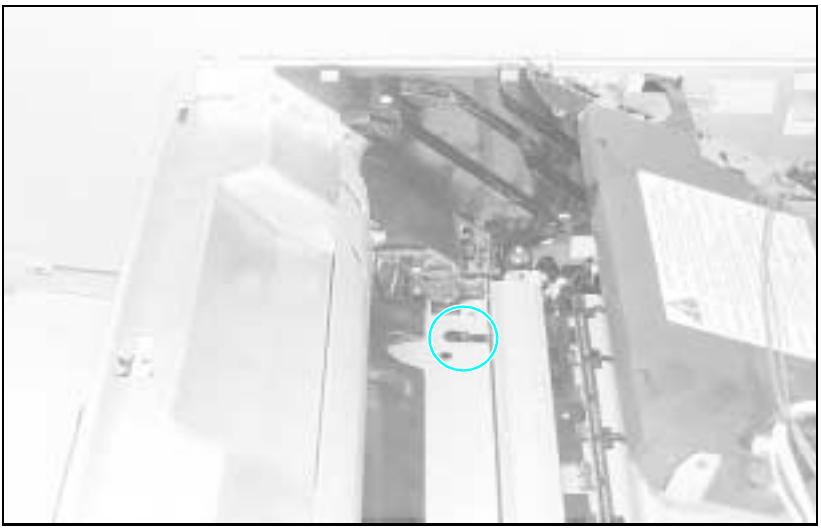

Figure 7-4 PS1 Input/Registration Sensor

PS3 (Exit Sensor) Check

1 Open the rear door (cover) of the printer.
2 The display should read `13 PAPER JAM` (or `REMOVE PAPER JAM`) immediately after the door is opened.
3 Close the rear cover. The display should change from `02 WARMING UP` to `00 READY`.
   a If the `00 READY` message does not appear, check that the rear door is not damaged, and the the door closes and latches properly.
   b If the `PAPER JAM` message does not appear, replace PS3.

Pickup Motor Functional Test (M2)

There is not a good method with which to access the test points around the Pickup Motor (M2) circuit. Therefore, when troubleshooting Pickup Motor failures, perform the following in the order listed (see Figures 7-11 and 7-12 for component location).

1 Reseat J601 and J602 on the Paper Control PCA.
2 Reseat J201 on the DC Controller. Reseat J703 on the Sensor PCA.
3 Verify that the Paper Control PCA and the Sensor PCA are firmly seated into one another.
4 Replace the Pickup Motor.
5 Replace the Paper Control PCA.
6 Replace the Sensor PCA.

Lower Cassette Functional Check

When troubleshooting a Lower Cassette failure, always prove the failure by removing the Lower Cassette from the printer. Next, test the printer's ability to move and print media satisfactorily without the Lower Cassette installed.

The Lower Cassette is a field-serviceable item. The procedures for removing and replacing the Lower Cassette components are in Chapter 6. Replacement parts for the Lower Cassette Assembly are listed in Chapter 8.

After the failure has been associated with the Lower Cassette Assembly, perform the following in the order given. Test the repair after each replacement.

1 Reseat all connectors in Lower Cassette.
2 Replace the Lower Cassette Pickup Motor.
3 Replace the Paper Control PCA.
4 Replace the DC Controller.

14 NO EP CART Message

The printer detects the presence of the Toner Cartridge and the level of toner present in the cartridge through the condition of the ANTIN signal. The ANTIN signal becomes part of the serial data stream used to communicate with the DC Controller (see Figure 7-5 for cartridge components). Troubleshoot the `14 NO EP CART` (or INSTALL TONER CARTRIDGE) message as follows:

1. Reseat the Toner Cartridge. Try a new or known good Toner Cartridge.
2. Check the High Voltage Contacts for damage. If the contacts are dirty or damaged, clean the contacts after the repair.
3. Replace the High Voltage Power Supply.
4. Check and reseat the HVPS cable.
5. Replace the DC Controller.

16 Toner Low Message

The `TONER LOW` message results as the level of toner in the cartridge cavity falls past the minimum level. The level is sensed by a mechanism similar to an antenna, which detects the AC Developer Bias Voltage applied to the developer mixture. If the `TONER LOW` message cannot be cleared by shaking or replacing the Toner Cartridge, perform the steps listed for troubleshooting the `14 NO EP CART` message.

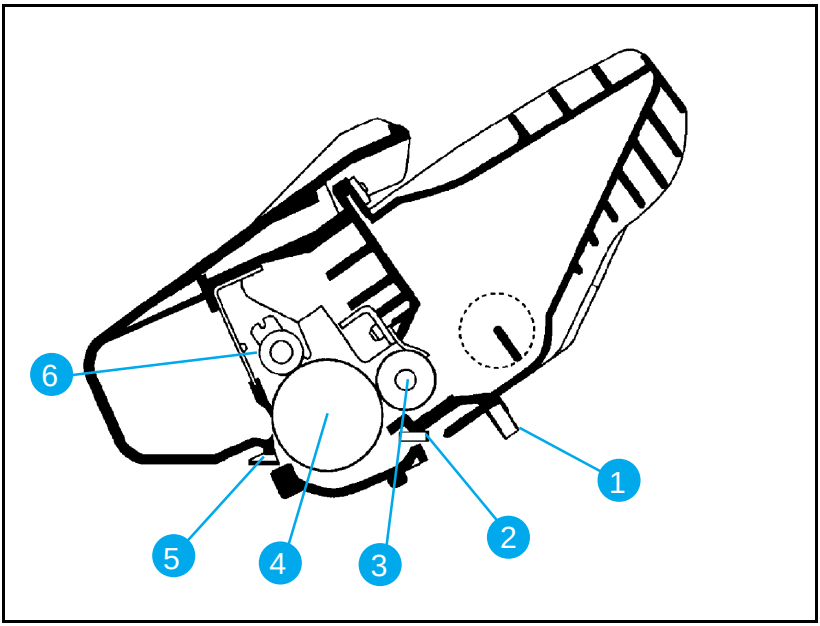

Figure 7-5 Toner Cartridge Components

Table 7-8 Toner Cartridge Components

Callout	Assembly
1	Toner Low Voltage Contact
2	Developer Roller High Voltage Contact
3	Developer Roller
4	Photoconductive Drum
5	Charge Roller High Voltage Contact
6	Charge Roller

41.X ERROR Message

A `41.X ERROR` (misprint) indicates that a *temporary* malfunction has occurred with the print engine (NOT a Formatter error). Occasional occurrences of this message can be expected. However, persistent `41 ERROR` messages indicate a problem requiring attention.

The `41.X ERROR` is usually accompanied by a blank, or partially printed page. Pressing the **Continue** (or **Go**) key re-prints the page, and continues the print job.

A `41 ERROR` occurs due to the following conditions:

- Incorrect Universal Tray Switch setting. Set the Universal Tray and the Lower Cassette Tray paper size as shown in Chapter 3.
- Wrong size paper in tray. Check that the Universal Tray, and/or the Lower Cassette settings match the installed paper.
- An unstable or temporary loss of the Beam Detect pulse. This problem normally is accompanied by a partially printed page, often with thin horizontal black lines, deformed characters, or solid black areas. Loss of the Beam Detect pulse for more than 2 seconds results in a `51 ERROR` condition.
- Paper reaching the Input Paper Sensor (PS1) before it is expected. This is accompanied by a blank page. This normally is due to paper feed problems.

  Proceed as directed in the following table.

Table 7-9 41.X ERROR Checks

Error Message	Recommended Action
41.1 ERROR Noisy Vertical Sync (VS)	Reseat all connectors on the DC Controller, the Laser Drive PCA, the Scanner Connector and the Beam Detect Connector.
41.2 ERROR Beam Detect (BD) weak or unstable.	Reseat all connectors on the DC Controller. Also check the Laser Scanning Assembly connections.
41.3 ERROR Paper Multifeed	1. Incorrect size selection on the cassette. 2. One of the cassettes is overfull. Remove the extra paper from the overfull cassette. 3. Check the paper for edge damage. Improperly cut edges can lock together causing multi-feeds. 4. Check that the pickup rollers and separation pad are not worn. Replace the rollers and pad as a set if necessary. Ensure that the corners of the paper are tucked in the tray's retainers. 5. Check the paper tension adjustment on the optional Lower Cassette, if attached. Refer to procedure in Chapter 3.
41.4 ERROR Vertical Sync Late (VS) Signal	Reseat the DC Controller and Formatter PCA Connections.
41.5 ERROR Undetermined Cause	Reseat the DC Controller and Formatter PCA connections.

See Figures 7-11 through 7-17 for connector locations.

50 SERVICE Error - Fuser Malfunction

Warning The Fuser Assembly is HOT. Allow the assembly time to cool before servicing.

The purpose of the fusing system is to maintain a constant temperature on the fuser roller. A high intensity fusing lamp, located inside the fuser roller, provides the high temperature required for the fusing process. While the printer is in standby mode, a temperature of approximately 172° C is maintained on the fuser roller. While the printer is in printing mode, a temperature of around 183° C is maintained.

The main components of the Fuser Assembly are the fusing lamp and its associated fusing and pressure rollers, a thermistor, thermoprotector, and the AC controller/safety circuitry in the AC Power Supply. The fusing lamp is a specially designed 460 watt (220V), or 500 watt (115V) halogen lamp that operates at line voltage. The thermistor is a resistor whose value changes with temperature. At room temperature the resistance value of the thermistor should be between 180k ohms and 280k ohms.The thermoprotector is a switch designed for over-temperature protection, and opens when the temperature reaches 230° C. The thermoprotector will not reset when the fuser cools. It may be necessary to replace the thermoprotector or fuser assembly if the thermoprotector opens.

The following conditions result in a fusing error:

1. Unable to maintain a temperature above approximately 180° C.
2. A temperature above 230° C.
3. A condition wherein a temperature of 165° C is NOT reached within 90 seconds after power-up.

Note If a `50 SERVICE` error message is displayed, turn the printer OFF for at least 10 minutes. Failure to wait the full 10 minutes before turning the printer ON results in a continuation of the error message and the shutting off of the fuser lamp current during this time, though the source of the error may have already been resolved.

Table 7-10 50 SERVICE Fuser Malfunction Checks

Checks	Action
Is the Fuser Assembly correctly seated?	Reseat the Fuser Assembly. Allow adequate time for the error message to clear (10 minutes) and turn the printer ON.
Is the Fuser Bulb/ Thermoswitch open?	The fuser bulb and thermoswitch are wired in series. To check if one or the other is defective, perform the following: 1. Remove the Fuser Assembly from the printer. 2. Use an ohmmeter and measure the continuity between pins (see Figure 7-6, callout 1). It should read about 2 ohms (about 4 ohms for the 220 volt fuser). If an open condition is detected, either the fusing bulb or the thermoswitch is defective. Replace the defective component (refer to Chapter 6) or replace the complete Fuser Assembly.
Is the Thermistor defective?	1. Remove the Fuser Assembly and let it cool to room temperature. 2. Use an ohmmeter and measure the resistance between pins (see Figure 7-6, callout 2) It should read about 220 K ohms +/- 40 K ohms at ambient room temperature. If the thermistor is either open or shorted, replace the thermistor (refer to Chapter 6) or the complete Fuser Assembly.
Does the error persist?	1. Verify all cabling is correct. 2. Replace the following components in the order given: Power Supply Assembly DC Controller PCA

See Figure 7-11 for Fuser Assembly location and Chapter 6 for removal and replacement, as necessary.

Note The `50 SERVICE` error message can be cleared immediately by shorting the C202 leads on the HP LaserJet 4/4M (or the C205 leads on the HP LaserJet 4 Plus/4M Plus/5/5M/5N) on the DC Controller. Remove the Formatter PCA to access the DC Controller as shown in Chapter 6.

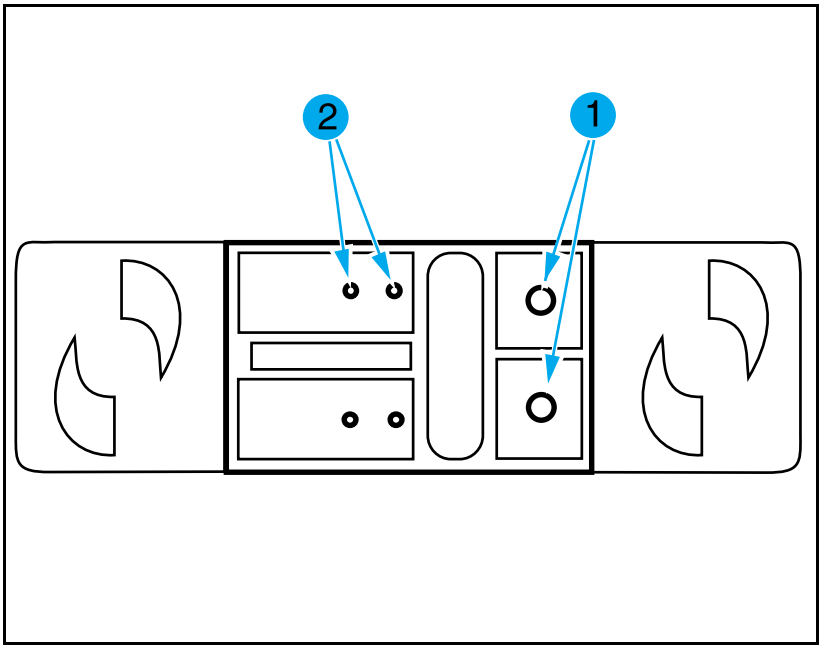

Figure 7-6 Fuser Assembly Connector

51 ERROR Message

The `51 ERROR`, and the `41.2 ERROR` are caused by Beam Detect failures. If the beam detect signal is lost for more than 2 seconds the error is posted as a `51 ERROR`. The `41.2 ERROR` can be cleared by pressing **Continue** (or **Go**). The `51 ERROR` may be cleared by power cycling the printer.

Table 7-11 51 ERROR Beam Detect Checks

Checks	Action
1. Are all connectors on the DC Controller properly seated?	Inspect connectors and wiring. Reseat or replace cables if necessary.
2. Is the Laser/Scanner Assembly Defective?	A defective Laser/Scanner Assembly can cause a `51 ERROR` by spinning the scanning mirror at the wrong speed. Replace the Laser/Scanner Assembly.
3. Is the DC Controller Defective?	Replace the DC Controller.
4. Has the printer been moved from a cold to a warm room?	Allow the printer to stand 6 hours until any condensation has dissipated.

52 ERROR Scanner Malfunction

The scanner motor is a flat, brushless, DC motor. Motor operation is completely controlled by the DC Controller.

The scanner motor is enabled when the printer is powered-up (during the printer's power-on self test), or whenever the PRINT command is received by the Formatter PCA. The scanner motor makes a distinctive sound when starting. The sound can be described as a "variable pitch whirring" sound. Listen for the sound of the scanner motor when troubleshooting the `52 ERROR`.

Laser/Scanner Assembly Functional Checks

Initiate a Self Test. As the test begins, listen for the sound of the scanner motor. If the motor cannot be heard, perform the following in the order given:

1. Check the Laser/Scanner and the Power Supply cables. Replace if necessary.
2. Replace the Laser/Scanner Assembly.
3. Replace the DC Controller.

57 (or 57.1) SERVICE Message (Main Motor Failure)

The `57 SERVICE` indicates that the DC Controller PCA detected a general motor failure. The Main Motor drives all moving components in the printing process. The Main Motor is a 4-phase, DC servo motor controlled by the DC Controller PCA.

The formatter detects a Main Motor failure when:

- The Main Motor does not come up to speed within one second of receiving drive voltage.
- The Main Motor deviates from the correct speed for one second after reaching the correct speed.

Main Motor Functional Checks

- Inspect the gear train for debris that would block the free operation of the gears.
- Check the gears in the Toner Cartridge for wear and binding.
- Reseat J211 (or J214 on the HP LaserJet 4 Plus/4M Plus) on the DC Controller PCA, and the main connector on the Main Motor Assembly. Refer to Figures 7-16 and 7-17 for the DC Controller PCA connector locations.
- If the problem persists, check that the +24B Voltage is present on the DC Controller. If the voltage is not present, replace the DC Controller. If the voltage is present, and the motor does not rotate, replace the Main Motor Assembly (see Figure 7-11 for location).

58 (or 57.2) SERVICE (Fan Failure)

The `58 SERVICE` indicates that the DC Controller detected a failure in the Exhaust Fan (FM1) in the printer or the optional duplexer. When troubleshooting this problem, perform the following steps in the order given.

1. Check that the fan is mounted correctly in its shroud.
2. Check that the fan blades are not blocked.
3. Check that the Cooling Fan connector is firmly seated on the DC Controller (see Figure 7-16 or Figure 7-17 for location).

If the above checks are satisfactory, replace the fan.

Note Verify the direction of air flow. Air should blow out of the printer.

Image Defect Summary

The quality of the printer's output is subject to the judgment of the user. This section of the manual helps you define print quality defects, and understand what factors affect print quality.

The print samples shown in the following figures illustrate some print quality defects. Keep copies of print quality defects encountered in the field with an explanation of their causes for future reference.

The image defects listed below are covered in the following tables. (For major assembly, connector, and switch locations, see Figures 7-11 through 7-18 later in this chapter.)

- Black Pages.
- Any Faint Print Condition
- Faulty Registration
- Vertical White Streaks.
- Right-hand Image Missing.
- Small Print Voids
- Random Horizontal Black Lines
- Repetitive Defects.
- Smeared Print/Improper Fusing.
- Distorted Print.
- Black Pages with Horizontal White Strips.
- Image Skew.
- Improperly Sized Image.
- Vertical Dark Streaks.
- Large Print Voids.
- Background Scatter.
- White or Blank Pages.

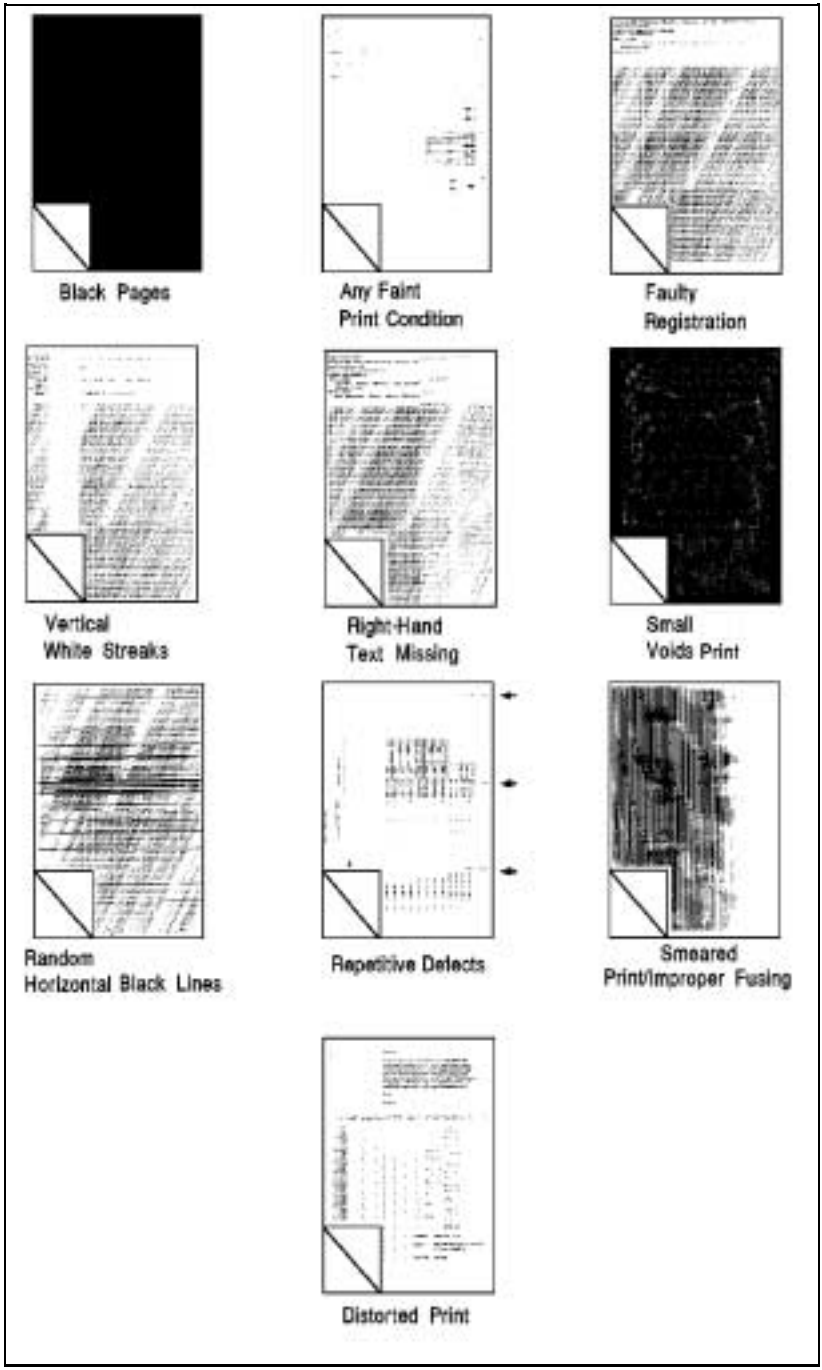

Figure 7-7 Image Defect Summary

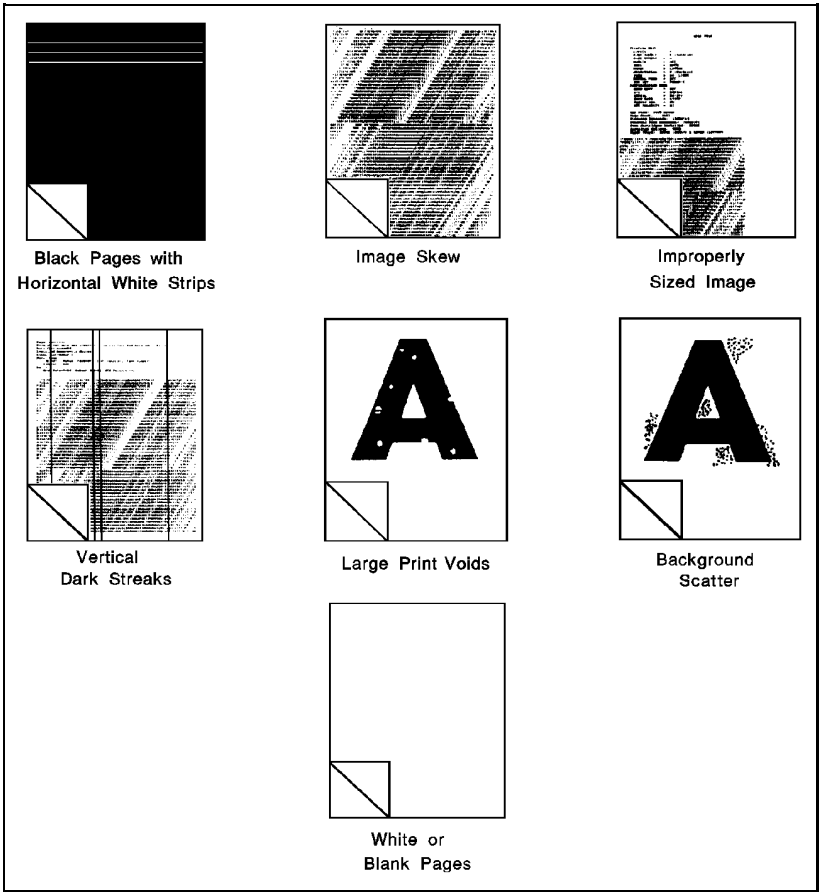

Figure 7-8 Image Defect Summary

Table 7-12 Black Pages

Possible Cause	Action
The HVPS connections are dirty.	Clean the HVPS terminals (see Figure 7-18 for layout).
The HVPS is installed improperly. If the HVPS has been removed and replaced, it may not be seated properly.	Remove the HVPS, and check the connectors for damage. Reseat the HVPS, being certain to fully seat the connectors.
Bad Primary Charging Roller.	Replace the Toner Cartridge.
The HVPS is defective.	Replace the HVPS.
DC Controller PCA. The laser drive circuitry is damaged so that the laser is always on.	Replace the DC Controller PCA, followed by the Formatter PCA if required.

Table 7-13 Any Faint Print Condition

Possible Cause	Action
Printer set to Economode.	Change driver and/or Control Panel settings to `ECONOMODE=OFF`.
Toner Cartridge.	Replace the Toner Cartridge.
Print density set improperly. The higher the print density setting, the more toner transferred to the drum.	Set the print density to a darker level. Replace the high voltage power supply if this has no effect.
The paper finish, conductivity, or moisture content may not be suitable for the electro-photographic printing process.	Try a known good source of paper from a freshly opened package. Refer to the HP LaserJet Family Paper Specifications Guide for media specifications.
The transfer roller may be defective.	Replace or reseat the roller.
Weak or no developer bias. If inadequate, or no developer bias is produced, toner is not attracted to the image written on the drum.	Adjust the print density setting as shown in Chapter 3.

Table 7-14 Faulty Registration

Possible Cause	Action
Paper. The surface of the paper may be too smooth for the pickup roller to move the paper through the paper path.	Change paper. Try a brand of paper known to be good.
Worn Pickup Roller and Separation Pad.	If the Paper Pickup Roller, or the Separation Pad are sufficiently worn, the leading edge of the paper may not reach the registration assembly in time. Replace the Pickup Roller and Separation Pad together.
PS1 faulty. If the Input/Registration sensor (PS1) is broken, it can not sense the presence of paper at the registration point.	Replace the Input/Registration Sensor.
Drive Gears. If any gear within the gear drive train becomes excessively worn or dirty, erratic paper movement results, causing image misregistration.	Examine the gears along the paper path for wear and contamination. Clean and inspect the gears. Replace any broken or defective gears.
Paper Tray. The paper tray may be preventing the paper from moving through the printer.	Verify that the tray is loaded correctly. Verify that the paper tray is seated fully into the printer. If possible, exchange tray with another printer to see if the problem is associated with the tray. Note the HP LaserJet 4/4M tray is NOT interchangeable with the HP LaserJet 4 Plus/4M Plus tray. The LJ5 paper trays are not compatible with the LJ4 or LJ4+. Replace the paper tray.
DC Controller replaced.	If the DC Controller was replaced, adjust VR202 as shown in Chapter 6.
Paper Input Assembly replaced.	The HP LaserJet 4/4M Paper Input Assembly is NOT compatible with the HP LaserJet 4 Plus/4M Plus. The LJ5 Paper Input Assembly is not compatible with the LJ4 or LJ4+ Input Assemblies. Installing a non-compatible Input Assembly results in paper input registration problems.

Table 7-15 Right-Hand Image Missing

Possible Cause	Action
No toner available for print.	Shake/replace the EP Toner Cartridge.
Laser shutter may be blocking the beam	Ensure that the mechanism that lifts the shutter is functional, for example, the shutter doesn't stick in its travel, and is lifted evenly.

Table 7-16 Small Print Voids

Possible Cause	Action
Small voids on black, or near-black printed images may be caused by imbedded toner on the electro-photographic drum. Cartridges that are run for long periods of time in high temperature and humidity conditions may develop this problem.	Replace the EP Toner Cartridge. If the printer is installed in a hot or humid location, tell the customer to move the printer to a better location.

Table 7-17 Random Horizontal Black Lines

Possible Cause	Action
Laser/Scanning Assembly misaligned or damaged.	Replace the Laser/Scanner Assembly.
DC Controller PCA	Replace the DC Controller PCA.

Table 7-18 Vertical White Streaks

Possible Cause	Action
1.No toner is available for print, or the toner level is low.	Shake the EP Toner Cartridge, replace the cartridge if the problem persists.
2.The lenses within the Laser/Scanning Assembly may be contaminated, blocking (or diffusing) the laser light.	Replace the Laser/Scanning Assembly.

Table 7-19 Repetitive Defects

Possible Cause	Action
Toner Cartridge. The circumference of the photoconductive drum is 3.75 inches (94mm). The circumference of the developer roller is 2 inches (51mm). If a defect appears in the print image at these intervals, assume the defect is associated with the Toner Cartridge.	Replace the Toner Cartridge.
Fuser Assembly. The Fuser Roller's circumference is approximately 2.5 inches (63mm) for the LJ4, and 3-1/8 (79mm) for the LJ4+/5. If a defect appears at this interval, assume the defect is associated with the Fuser Assembly.	Clean the Fuser Assembly rollers. Replace the assembly if necessary.
Dirty Roller. Any dirty roller along the paper path may result in a pattern of repetitive print image defects.	Examine and clean rollers along the paper path.

For further information on interval dimensions, refer to the Repetitive Defect Ruler, Figure 7-19.

Table 7-20 Smeared Print/Improper Fusing

Possible Cause	Action
Fuser levers not in place. (All LJ4, some LJ4+, N/A on LJ5)	The Fuser Assembly has shipping levers that must be lowered during the setup process. See Chapter 3 for instruction on how to lower the fusing levers.
Media. The media may not be acceptable for laser printing. Heavy paper stock is a common cause of smeared print and improper fusing.	Verify that the media meets specifications as shown in the HP LaserJet Family Paper Specifications Guide.
Dirty Fuser Assembly. The print smears if the Fuser Assembly is dirty.	Replace the Fuser Assembly and clean the printer.
Bent Static Teeth. If the static teeth are defective, the print could smear prior to the paper entering the Fuser Assembly.	If the teeth are bent or defective, replace the Static Teeth Assembly.
Worn Gears. If the drum and paper are not moving at the same speed the characters may smudge.	Replace the Toner Cartridge.
Foreign object in paper path. Something is smearing the unfused toner image on the surface of the paper.	Remove any foreign material. Try a new Toner Cartridge.
Orange Packing Spacers not removed. Some HP LaserJet 4 only.	Remove Orange Packing Spacers.

Table 7-21 Distorted Print

Possible Cause	Action
Paper Path. If the paper does not move at a uniform speed, the print image will be affected. Characters that are either too tall or too short (in the direction of paper motion), are usually a result of drive mechanism problem.	Examine the paper transport rollers along the paper path for wear. Replace if excessive wear exists. Inspect and replace the Toner Cartridge, Drive Gear Assembly, Main Motor, or Fuser Assembly as necessary.
Laser/Scanning Assembly. Wavy, irregular-shaped characters, or irregular line margins in the scan direction of printing are usually a result of a defective Laser/Scanning Assembly.	Replace the Laser/Scanning Assembly.

Table 7-22 Black Pages with Horizontal White Strips

Possible Cause	Action
Laser/Scanning Assembly or DC Controller PCA.	Replace the Laser/Scanning Assembly followed by the DC Controller PCA, if necessary (see Figure 7-12 for locations).

Table 7-23 Image Skew

Possible Cause	Action
Input/Registration Sensor (PS1). The Paper Pickup Roller positions the leading edge of the paper at the Input/Registration Sensor (PS1). If this sensor is defective it may not sense the presence of the paper reliably (on time).	Replace the Input/Registration Sensor. Skew tolerance for the printer is 1.5mm over 260mm page length.
Drive Gears. If any gear within the gear drive train becomes excessively worn, or is excessively dirty, erratic paper movement would result, leading to image misregistration.	Closely examine the gears along the paper path for wear and contamination. Clean and inspect the gears. Replace any defective gear.
Paper Tray. The paper tray may be preventing the paper from freely moving through the printer.	Verify that the tray is loaded correctly. Verify that the paper tray is seated fully into the printer. Switch trays to verify that the problem follows the tray. Replace the paper tray.
Paper. The surface of the paper may be too smooth for the pickup roller to move the paper through the paper path.	Change paper. Try paper known to be good.
Paper too heavy?	See *Paper Specifications* in Chapter 2.

Table 7-24 Improperly Sized Image

Possible Cause	Action
PC tray Microswitches. The paper tray microswitches indicate the paper size of the installed tray. This information is used to format the print image to the size of the paper installed in the tray. If the paper tray microswitches are defective, the image is formatted incorrectly.	Perform the “Cassette Size Switches (SW603, SW604, SW605) Functional Check” on page 7-15. Ensure that the correct envelope size is selected if appropriate.
PS 5 is defective. PS 5 senses the trailing edge of the media being fed from the MP tray.	If improperly sized images result from printing from the MP tray, check that PS 5 is functioning correctly mechanically and electrically. This feature allows odd-sized media to be printed with the MP tray. Troubleshoot PS 5 as shown in the following procedure.
MP Paper Size is not set correctly.	Use the MP Paper Size Button on the Front Panel to correctly configure paper size for the MP Tray.

PS5 Check (MP Tray Paper End Sensor) Functional Test

1. Make a test sheet by cutting a notch in the trailing edge of a sheet of paper as shown in Figure 7-9.
2. Perform the set up procedures listed for the PS4 check (MP Tray Empty Sensor) on page 7-17, and put the test sheet into the MP tray when the display reads `XX LOAD LEGAL`.
3. The self test print should stop 2 to 5 mm above the notch (see Figure 7-9).
4. Print that extends into cut out area indicates that the sensor PS5 is not free in its travel or is defective. Ensure that the sensor lever is free throughout its entire range of travel. If not, replace the lever or the sensor itself.

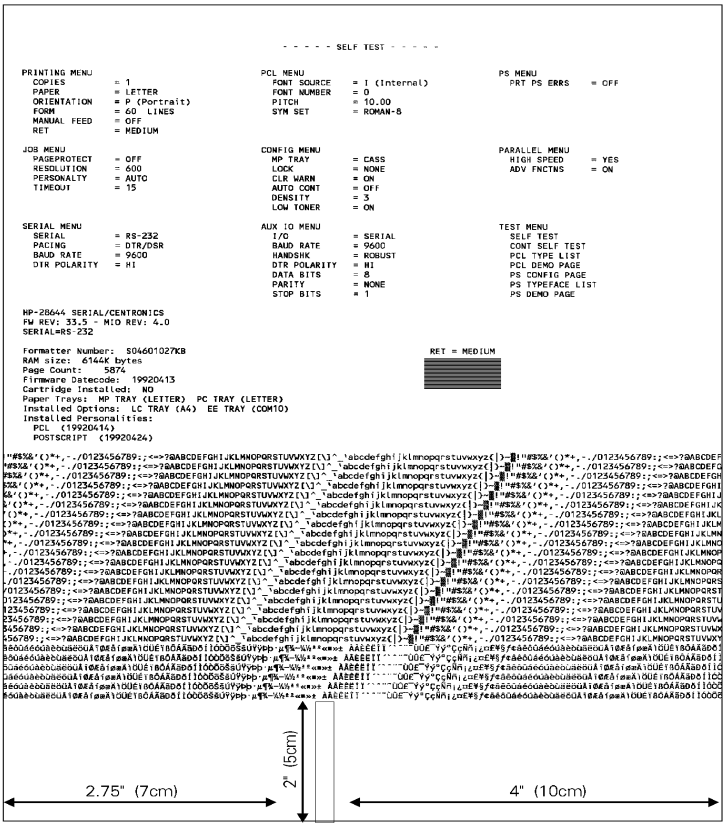

- - - - - SELF TEST - - - - -

PRINTING MENU
COPIES = 1
PAPER = LETTER
ORIENTATION = P (Portrait)
FORM = 60 LINES
MANUAL FEED = OFF
RET = MEDIUM

JOB MENU
PAGEPROTECT = OFF
RESOLUTION = 600
PERSONALTY = AUTO
TIMEOUT = 15

SERIAL MENU
SERIAL = RS-232
PACING = DTR/DSR
BAUD RATE = 9600
DTR POLARITY = HI

PCL MENU
FONT SOURCE = I (Internal)
FONT NUMBER = 0
PITCH = 10.00
SYM SET = ROMAN-8

CONFIG MENU
MP TRAY = CASS
LOCK = NONE
CLR WARN = ON
AUTO CONT = OFF
DENSITY = 3
LOW TONER = ON

AUX IO MENU
I/O = SERIAL
BAUD RATE = 9600
HANDSHK = ROBUST
DTR POLARITY = HI
DATA BITS = 8
PARITY = NONE
STOP BITS = 1

PS MENU
PRT PS ERRS = OFF

PARALLEL MENU
HIGH SPEED = YES
ADV FNCTNS = ON

TEST MENU
SELF TEST
CONT SELF TEST
PCL TYPE LIST
PCL DEMO PAGE
PS CONFIG PAGE
PS TYPEFACE LIST
PS DEMO PAGE

HP-28644 SERIAL/CENTRONICS
FW REV: 33.5 - MIO REV: 4.0
SERIAL=RS-232

Formatter Number: S04601027KB
RAM size: 6144K bytes
Page Count: 5874
Firmware Datecode: 19920413
Cartridge Installed: NO
Paper Trays: MP TRAY (LETTER) PC TRAY (LETTER)
Installed Options: LC TRAY (A4) EE TRAY (COM10)
Installed Personalities:
PCL (19920414)
POSTSCRIPT (19920424)

RET = MEDIUM

Figure 7-9 PS5 Test Sheet

Table 7-25 Vertical Dark Streaks

Possible Cause	Action
Dirty Primary Charge roller.	Change the Toner Cartridge.
Bad Toner Cartridge.	Replace the Toner Cartridge.
Incompatible media. During media manufacture, inks, or other finishing processes may interfere with the electro-photographic or fusing process.	Change type of media.

Table 7-26 Large Print Voids

Possible Cause	Action
Defective laser shutter.	Check the laser shutter for free operation when inserting the EP Toner Cartridge.
EP Cartridge Support damaged, improperly positioned, or missing.	Refer to item 4 in Figure 8-4a. Guide must be installed properly above the EP Cartridge, between the laser shutter opening and the fuser stop plate.
Bad transparencies. Transparencies exhibit this problem if they are not designed for proper toner adhesion.	Use Hewlett-Packard-approved transparencies (refer to the *HP LaserJet Family Paper Specifications Guide)*.
Bad paper lot. The surface of the paper may be too smooth for proper toner adhesion.	Try a known good paper from a reliable source (refer to the *HP LaserJet Family Paper Specifications Guide*).
Poor fusing. Toner may not be fused properly to the media.	Try a known good paper from a reliable source (refer to the *HP LaserJet Family Paper Specifications Guide*).
Print image fusing may not occur correctly.	Replace Fuser Assembly (see Figure 7-11 for location).
Wet paper. The paper may be damp.	Try a new batch of paper. Store the paper in a dry area.
Transfer roller is dirty.	Replace the transfer roller.

Table 7-27 Background Scatter

Possible Cause	Action
Defective Toner Cartridge. The Toner Cartridge may be internally damaged.	Replace the Toner Cartridge.
Bad paper lot. The paper moisture content, conductivity, or surface finish may be incompatible with the electro-photographic process.	Try a different paper lot (see the *HP LaserJet Family Paper Specifications Guide*) for paper specifications.
Print density set incorrectly. If the print density is set incorrectly, background scatter can result, particularly with envelopes.	Adjust the print density.
Inside of printer dirty. If toner dust leaked out of the EP Toner Cartridge, this problem can occur.	Clean the inside of the printer.

Table 7-28 White or Blank Pages

Possible Cause	Action
Defective laser shutter.	Check the laser shutter for free operation when inserting the EP Toner Cartridge.
EP Cartridge Support damaged, improperly positioned, or missing.	Refer to item 4 in Figure 8-4a. Guide must be installed properly above the EP Cartridge, between the laser shutter opening and the fuser stop plate.
Toner Cartridge. No toner is available for print.	Remove sealing tape or replace the Toner Cartridge.
No Transfer Roller voltage. Without transfer charge roller voltage, toner cannot be attracted from the surface of the drum to the paper.	Perform the “Half Self Test Functional Check” which follows to check all other electro-photographic processes.
No Developing Bias. With no Developing Bias charge, toner is not attracted to the drum.	Refer to “High Voltage System Checks.”
No drum ground path. With no ground path the drum cannot discharge. The negative charge on the drum repels toner, and leaves a white page.	Refer to “High Voltage System Checks.”
Bad Laser Scanning Cable Assembly. Low-level signals exchanged between the Laser/Scanning Assembly, and the DC Controller may be affecting laser output.	Replace the Laser/Scanning Cable Assembly.

Image Formation Troubleshooting

Half Self-Test Functional Check

The electro-photographic process can be subdivided into the following stages:

- Cleaning (Physical and Electrostatic).
- Conditioning (Primary Charge Roller).
- Writing (Laser Modulation).
- Development (Formation of the Toner Image).
- Transfer (Charge to transfer the image to paper).

The purpose of the Half Self Test Check is to determine which process is malfunctioning. Perform the test as follows:

1. Initiate an `05 SELF TEST`.
2. Open or switch OFF the printer after the paper advances halfway through the printer (the leading edge of the paper should advance at least past the Transfer Charge roller).
3. Remove the Toner Cartridge.
4. Open the Toner Cartridge's drum shield to view the drum's surface.

If a dark and distinct toner image is present on the drum's surface, assume that the first four functions of the electro-photographic process are functioning, and troubleshoot the failure as a transfer problem. If NO image is present on the photoconductive drum, perform the checks shown on the following pages.

- The Drum Rotation Functional Check.
- High voltage Power Supply Check.

Drum Rotation Functional Check

The photoconductive drum, located in the Toner Cartridge, must rotate for the print process to work. The photoconductive drum receives its drive from the Main Motor gear train. To verify whether the drum is rotating:

1. Open the printer's Top Cover Assembly.
2. Remove the Toner Cartridge. Open the Toner Cartridge's drum shield (cover) to view the photoconductive drum.
3. Mark the gear with a felt-tipped marker. Note the position of the mark.
4. Install the EP Toner Cartridge, and close the Top Cover. The 1-second startup sequence should rotate the drum enough to move the mark. Open the printer, and inspect the drum. Verify that the mark moved.

If the mark did not move, inspect the gear train to ensure that it is meshing with the Toner Cartridge gears. If the drive gears appear functional, and the drum does not move, replace the Toner Cartridge.

Note This test is especially important if refilled Toner Cartridges were used.

High Voltage Power Supply Assembly

The High Voltage Power Supply Assembly provides the necessary voltages for the printer's electro-photographic processes. The +24B VDC supply is used to power the High Voltage Power Supply Assembly. A summary of the major components of the high voltage system, is given in the table below (see Figure 7-18 for High Voltage PCA layout).

Table 7-29 High Voltage System Checks

Checks	Action
Are the connectors for the Primary Charge roller, Drum Ground, Developing Bias, Toner Level Sensor damaged, corroded, dirty, or missing? Also check the Toner Cartridge.	Visually inspect each item. If any are damaged, correct as necessary. Replace the High Voltage Power Supply if the connection is not repairable. Check that all wires are connected to their respective terminals.
Are the HVPS connections bent or broken?	Clean the terminals with alcohol only.

Interface Troubleshooting

This section provides an overview of the printer interface requirements. Refer to Chapter 3 for detailed information about the printer interfaces and configuration.

Communications Check

Note

Communication problems are normally the customer's responsibility. Time spent attempting to resolve these problems may not be covered by the product's Hewlett-Packard warranty.

The Customer Service Center (CSC) is available to the customer to help them through these problems. The CSC telephone number is: (208) 323-2551.

If the printer is not connected to an MS-DOS-based host, proceed to the Communications Checks table in this section.

Test Message

After the printer is installed, verify communications between the printer and the IBM-compatible computer. Enter the following at the DOS prompt:

`C:\DIR>LPT1` **Enter**

The printer should print a directory listing of the C:\ directory. If the Communications Check fails, proceed as follows.

AUTOEXEC.BAT Standard Configurations

Parallel DOS Commands

If the previous check did not produce the desired result, ensure that the AUTOEXEC.BAT file contains the following statements for parallel interface communications:

```
MODE LPT1:,,P
```

For MS-DOS version 4.0 and above, enter:

```
MODE LPT1:,,B
```

Note This example assumes that you are using parallel printer port LPT1. If you are using LPT2 or LPT3, replace LPT1 in the example with the appropriate printer port.

If the problem persists, proceed to Table 7-30 “Communications Checks.”

Serial MS-DOS Commands

Most IBM compatible computers default to a parallel printer port. To ensure that information is sent to your serial printer port, type the following MS-DOS commands at your MS-DOS prompt, or include them in your AUTOEXEC.BAT file.

```
MODE COM1:9600,N,8,1,P

MODE LPT1:=COM1
```

For MS-DOS version 4.0, or above, enter:

```
MODE COM1:9600,N,8,1,B

MODE LPT1:=COM1
```

Note These examples assume that you are using serial printer port COM1. If you are using COM2 or COM3, replace COM1 with the appropriate printer port.

If the problem persists, proceed with the following checks in Table 7-30.

Communications Checks

Table 7-30 Communications Checks

Checks	Action
Is your computer configured to the parameters described in the configuration instructions?	These parameters are required to communicate with the printer. Verify your computer's communications port configuration matches these parameters. Note: If these parameters are not set properly, they may yield a `40`, `20`, or `22 ERROR` on the printer's Control Panel.
For Serial Communications only	
Does the printer's baud rate match that of the computer's communications port?	Run the printer's Self Test to verify the baud rate setting. At the computer, verify that the baud rate is set correctly in any configuration files. Note: A baud rate problem may cause a `40 ERROR`.
Are you using the correct cable for communications between the computer and the printer?	See the cable wiring in Chapter 3. Hint: On an RS-232 cable, pins 2 and 3 may need to be reversed at the printer-end of the cable.
Are you using the correct RS-232-C protocol?	During the communications "handshake," the printer transmits both the XON/XOFF signal, and the DTR signal. The DTR (Data Terminal Ready) signal may be either negative going, or positive going. DTR polarity is set at the printer's Control Panel. The XON may be set to normal (only transmitted when data is needed), or Robust XON (transmitted every second). This feature is configurable from the Control Panel. DTR is available at pin 20, and XOFF is transmitted from pin 2 of the printer.

Table 7-30 Communications Checks (continued)

Checks	Action
If using a serial interface, is the cable longer than 50 feet (15 meters)?	The maximum recommended cable length for RS-232 serial communications is 50 feet. Use RS-422 for the HP LaserJet 4/4M printer, or move the printer closer to the host.
If using a Centronics parallel cable, is it over 10 feet (3 meters) long?	Use a serial interface connection, or move the printer closer to the host.
Do all the current Control Panel Configuration Menu items match the host system's parameters?	Make appropriate changes. If host system changes are made, be sure to reboot the system, or otherwise ensure the changes are in effect.
Does the printer have a bad interface port?	If possible, try a different printer interface than the one with the problem. Reconfigure the printer and host.
Does the host have a bad interface port?	If possible, try a different host system port, and reconfigure both the host and printer appropriately.

If the host system and printer still are not communicating, and steps 1 through 9 have been completed, replace the Formatter PCA and the MIO card, and reconfigure the printer. If the problem persists, a protocol analyzer may be needed to find the source of the problem.

Caution HP LaserJet printers are not designed to work with mechanical switch-box products without proper surge protection. These devices generate high transient voltages that cause permanent damage to the Formatter PCA. This circumstance is not covered by the Hewlett-Packard warranty.

MIO Troubleshooting

The Self Test Printout and explanation shown on the following pages contain valuable information regarding the current status of the MIO. Before attempting to troubleshoot a network problem or notifying your network consultant of a problem, always obtain a Self Test Printout.

Troubleshooting Hints

The JetDirect Card Status Block (see Figure 7-10, status block 2) indicates the functionality of the JetDirect Card. An I/O NOT READY STATUS indicates a problem. A 2-digit error code follows the message. Use the HP JetDirect Network Interface Configuration Guide (P/N J2552-90001) for detailed explanations of errors and suggested corrective action.

NETWORK STATISTICS, status block 3, indicates network activity. Bad packets, framing errors, unsendable packet and collisions should be minimal. If unusually high numbers of these statistics occur, please advise the network administrator.

The various Network Operating Systems supported by these printers are indicated in status blocks 4, 5, 6, and 7. When the status is READY, the printer has successfully connected to the host network server and is awaiting data. Other messages indicate the printer is either still trying to successfully connect to the network or a configuration problem has been encountered. Refer to the HP JetDirect Network Interface Configuration Guide (P/N J2552-90001) for detailed explanations of these messages.

Explanation of Self Test Printout

1 Multiple Environment Information. General information about your JetDirect MIO.

2 JetDirect Card Status. I/O CARD READY indicates the interface is correctly configured and capable of communicating. I/O CARD NOT READY indicates there is a problem with the interface, configuration, or server.

3 Network Statistics. A list of network statistics is generated by the JetDirect MIO. All statistic counters are reset to zero when the printer is turned OFF.

Supported Network Operating Systems

4 Novell Status Information

5 Apple Ether Talk/Local Talk Status Information

6 HP-UX, Solaris and Sun/OS (TCP/IP) Status Information

7 Lan Server/Lan Manager/Windows for Workgroups/Windows NT Status Information

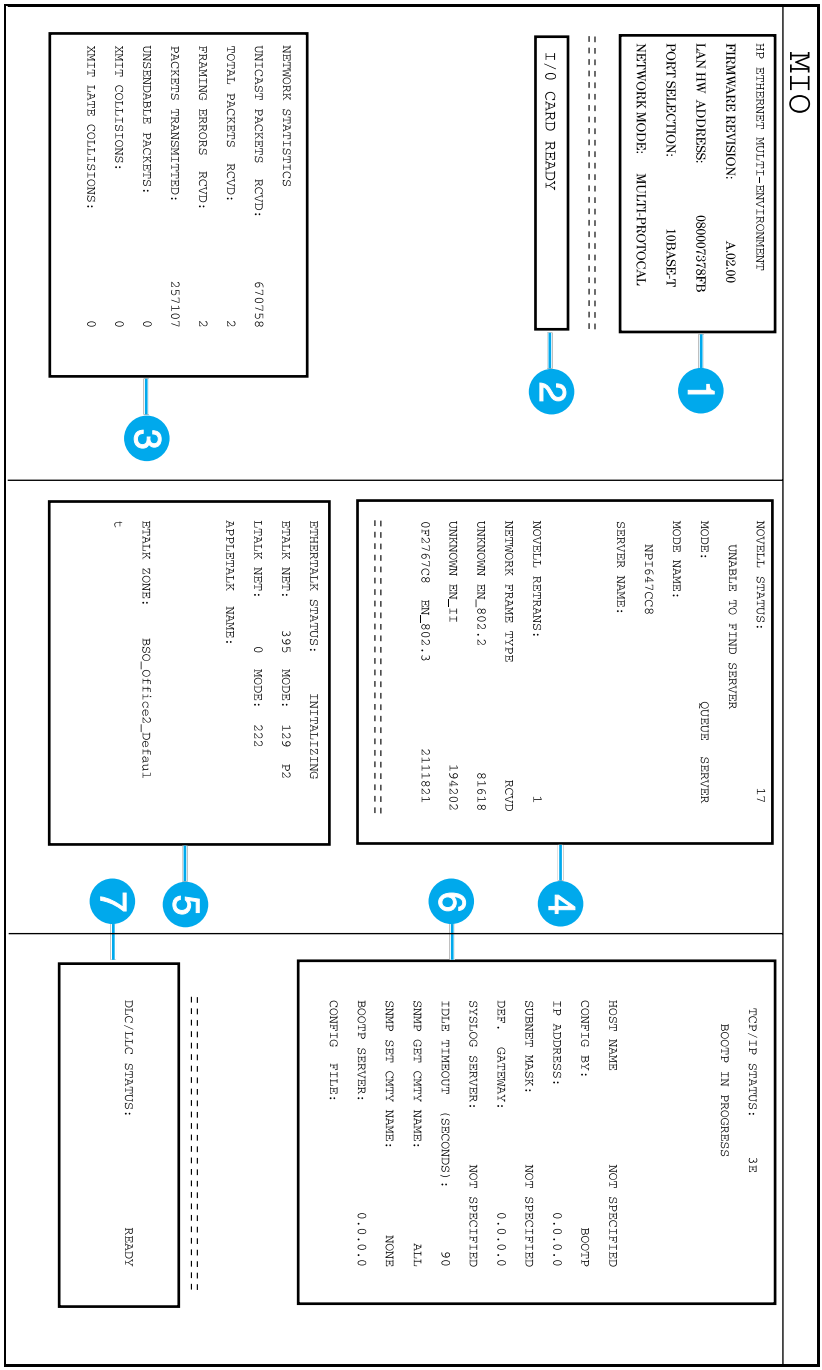

Figure 7-10 MIO Staus Information on the Self Test Printout

Troubleshooting Aids

Component Locations

The following illustrations help you quickly find the parts discussed in this chapter.

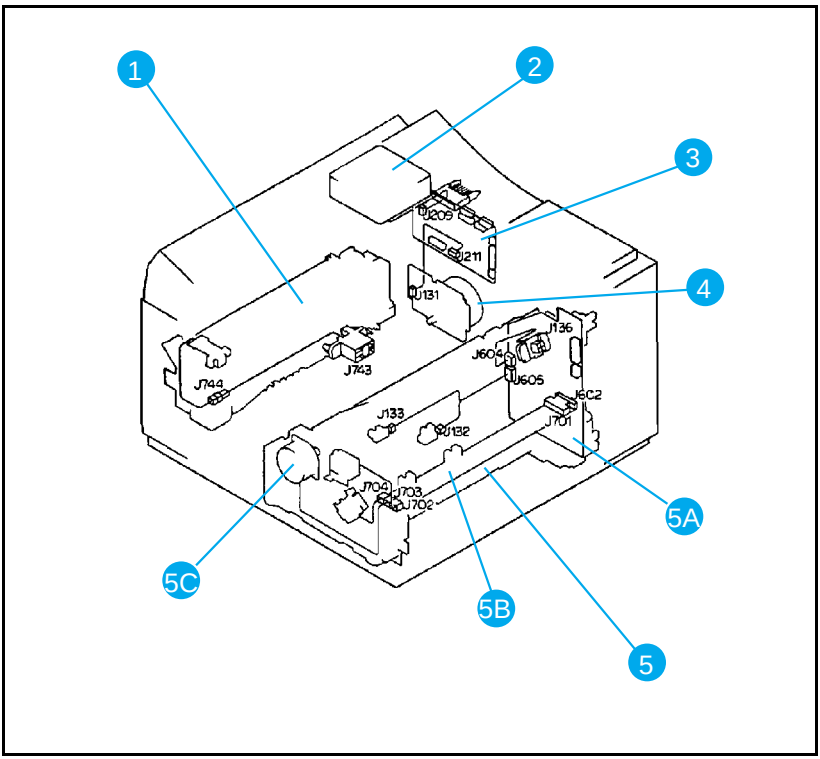

Figure 7-11 Major Assembly and Connector Locations

Table 7-31

Number	Part	Number	Part
1	Fuser Assembly	5	Paper Feed Assembly
2	Cooling Fan	5A	Paper Control PCA
3	DC Controller PCA	5B	Sensor PCA
4	Main Motor Assembly	5C	Paper Pickup Motor (M2)

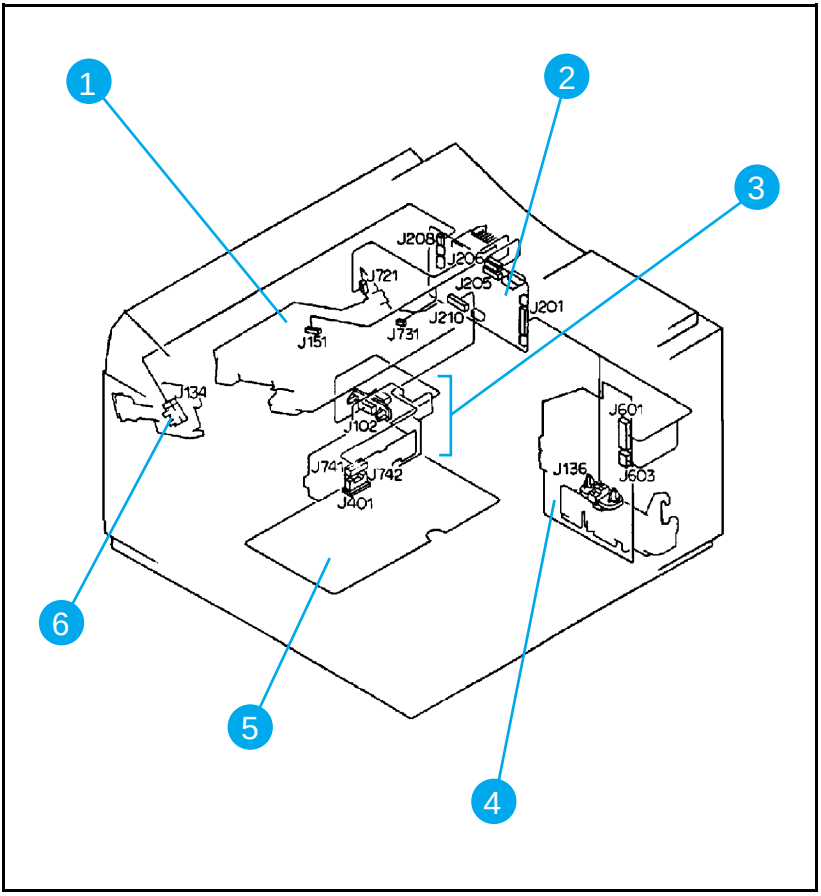

Figure 7-12 Major Assembly and Connector Locations (2 of 3)

Table 7-32

Number	Part
1	Laser/Scanner Assembly
2	DC Controller PCA
3	Interconnect PCA Assembly
4	Paper Control PCA
5	High Voltage Power Supply PCA
6	Exit Sensor Assembly

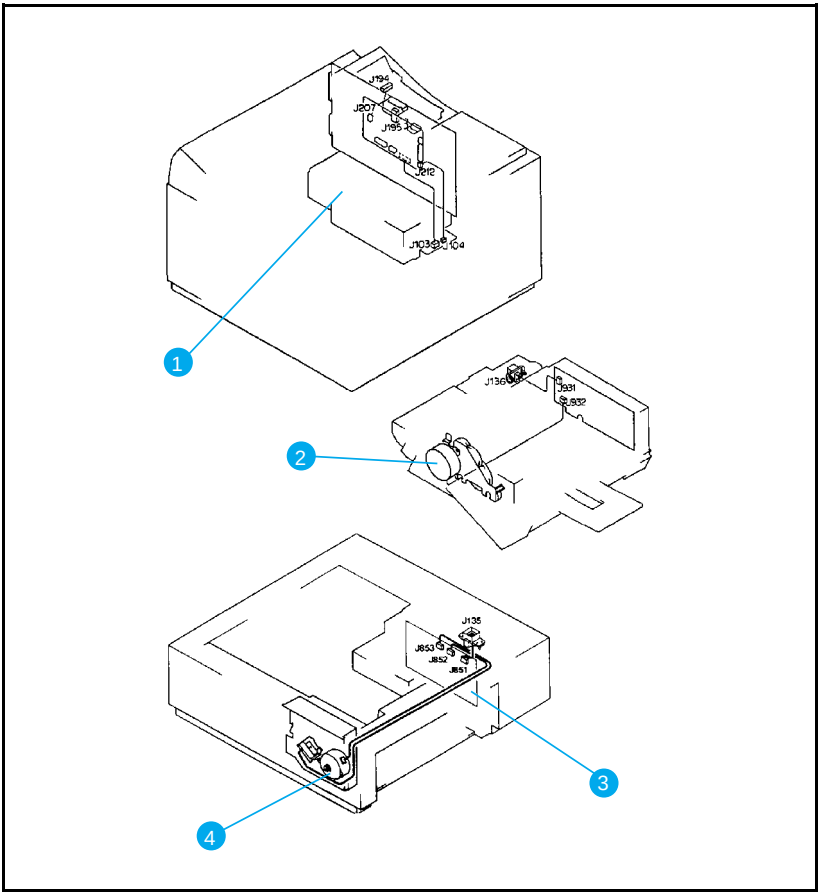

Figure 7-13 Major Assembly and Connector Locations (3 of 3)

Table 7-33

Number	Part
1	Power Supply Assembly
2	Envelope Feeder Main Motor (M4)
3	Lower Cassette Drive PCA
4	Lower Cassette Main Motor (M3)

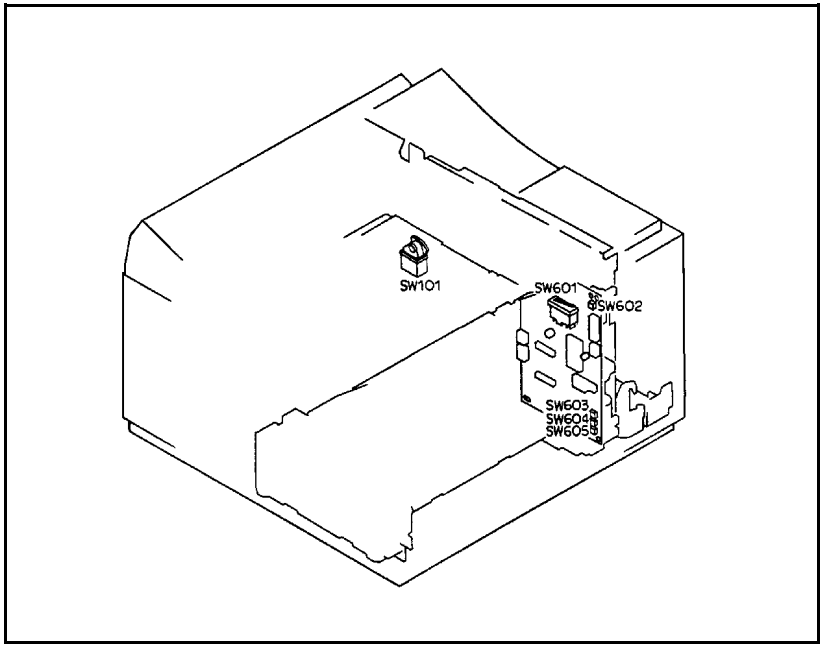

Figure 7-14 Switch Locations

Table 7-34

Number	Part
SW101	AC Input ON/OFF Switch (Power Supply Assembly)
SW 601	Top Cover Open Sensing Switch
SW602	TEST PRINT Switch
SW603	PC (Tray 2) Tray Size Switches
SW604	
SW605	

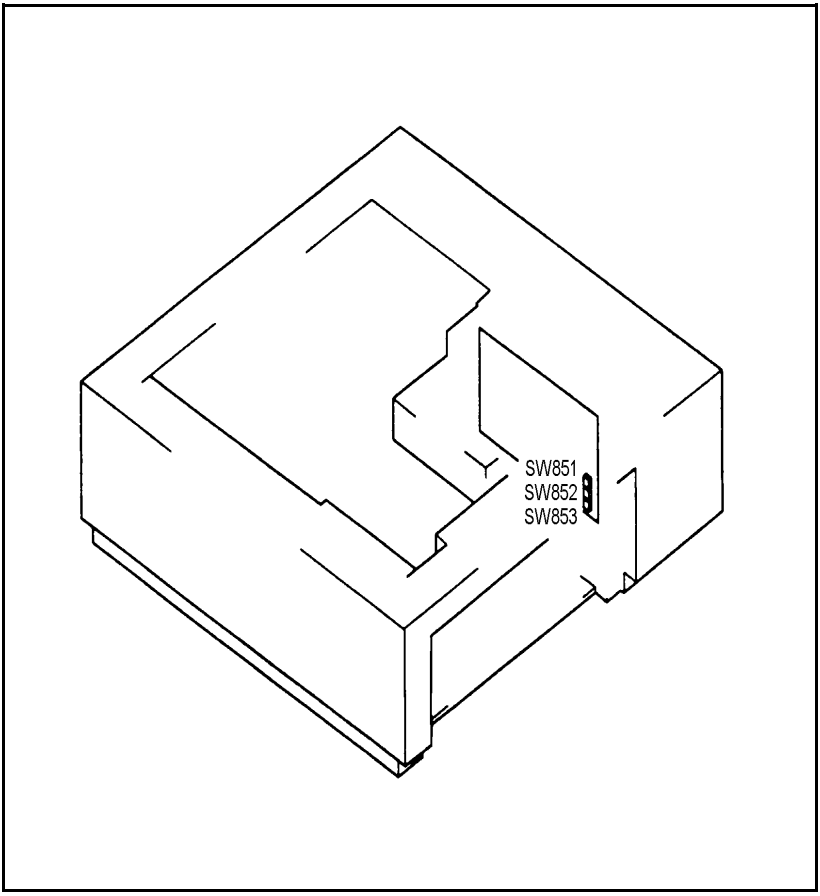

Figure 7-15 Optional 500 Sheet Lower Cassette

Table 7-35

Number	Part
SW851	Optional 500 Sheet Paper Feeder Paper Tray (Tray 3) Size Switches
SW852	
SW853	

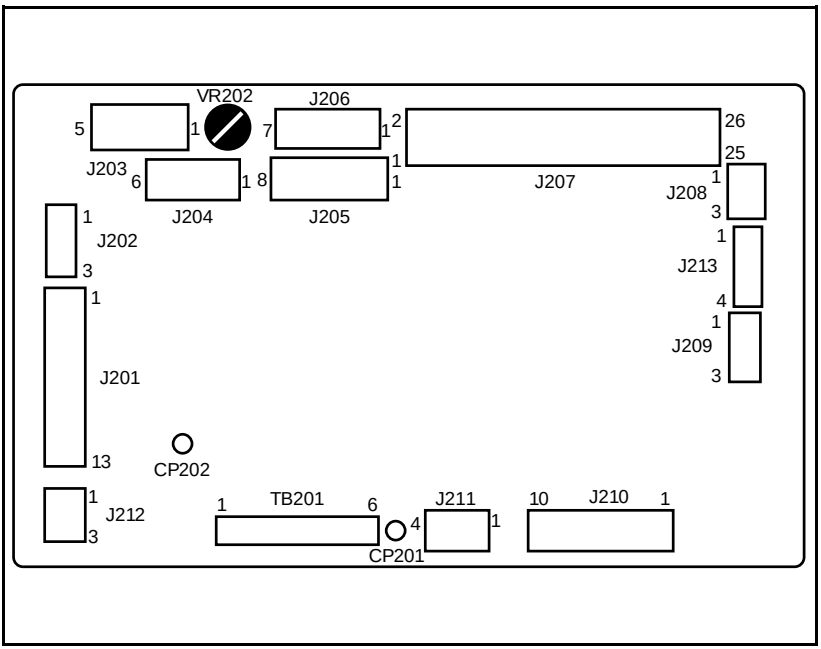

Figure 7-16 DC Controller PCA Layout—LaserJet 4/4M

Table 7-36

Number	Part
J201	Paper Control PCA
J205	Scanner/Beam Detect
J206	Laser Drive PCA
J207	Formatter PCA
J208	Deliver/Exit Sensor PS3
J210	Interconnect PCA
J209	Cooling Fan
J211	Main Motor
J212	Power Supply/Fuser Drive
VR202	Registration Adjustment
TB201	DC Voltages (from Power Supply)

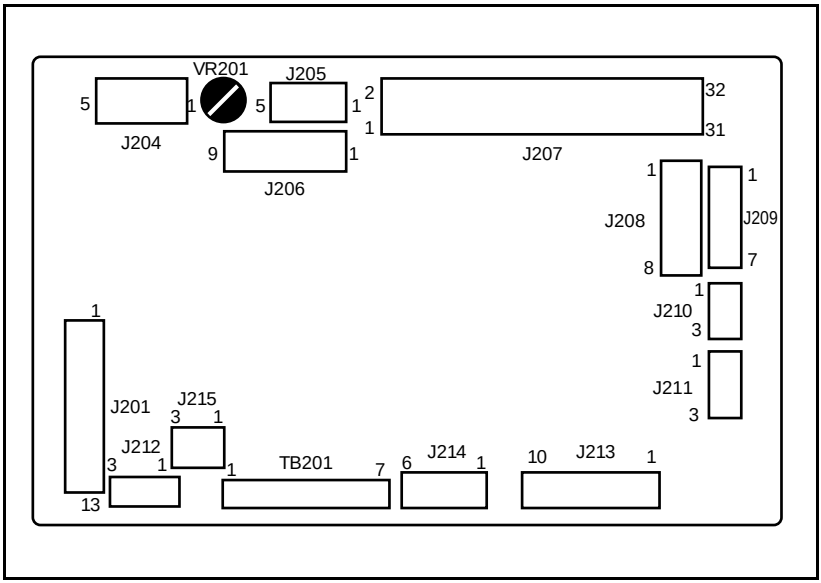

Figure 7-17 DC Controller PCA Layout —LaserJet 4 Plus/5

Table 7-37

Number	Part
J201	Paper Control PCA
J208	Scanner/Beam Detect
J209	Laser Drive PCA
J207	Formatter PCA
J210	Deliver/Exit Sensor PS3
J213	Interconnect PCA
J211	Cooling Fan
J214	Main Motor
J215	Power Supply/Fuser Drive
VR201	Registration Adjustment
TB201	DC Voltages (from Power Supply)
J206	Control Panel

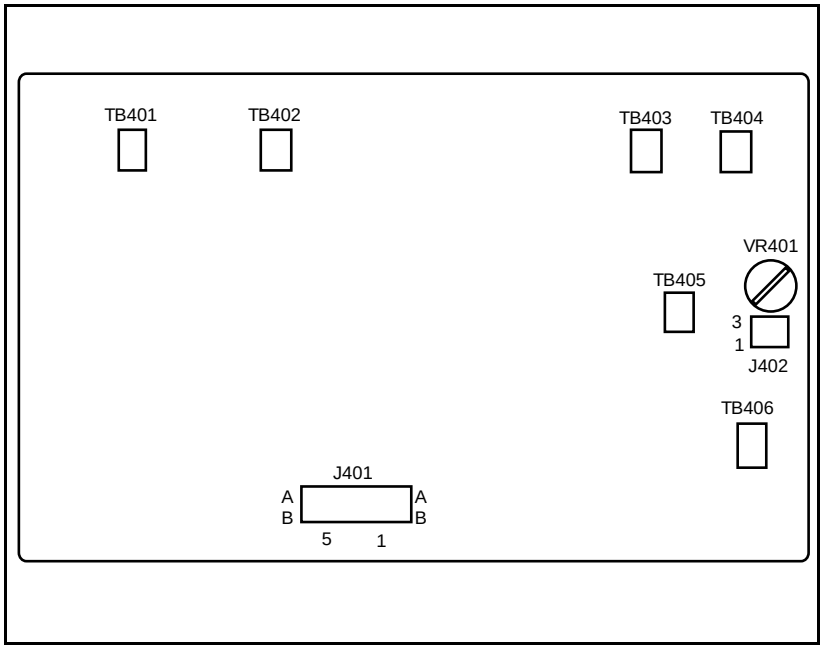

Figure 7-18 High Voltage PCA Layout

Table 7-38

Number	Part
J401	High Voltage PS Connection To DC Controller PCA via Interconnect PCA
TB401	Transfer Roller Contact
TB402	Drum Ground Contact
TB403	Toner Low/EP Toner Cartridge-in-Place Contact
TB404	GND
TB405	Developer Roller Contact
TB406	Charge Roller Contact
VR401	Factory Adjustment Only

Repetitive Defect Template

Repetitive print defects usually are associated with a specific roller within the printer, or the Toner Cartridge. The following templates are provided to help quickly isolate the cause of repetitive print defects. Align the first occurrence of the defect with the top of the “ruler”, and measure to the next occurrence of the defect to determine the roller in question. When you are certain that your defect pattern matches the pattern of the template, replace the indicated roller.

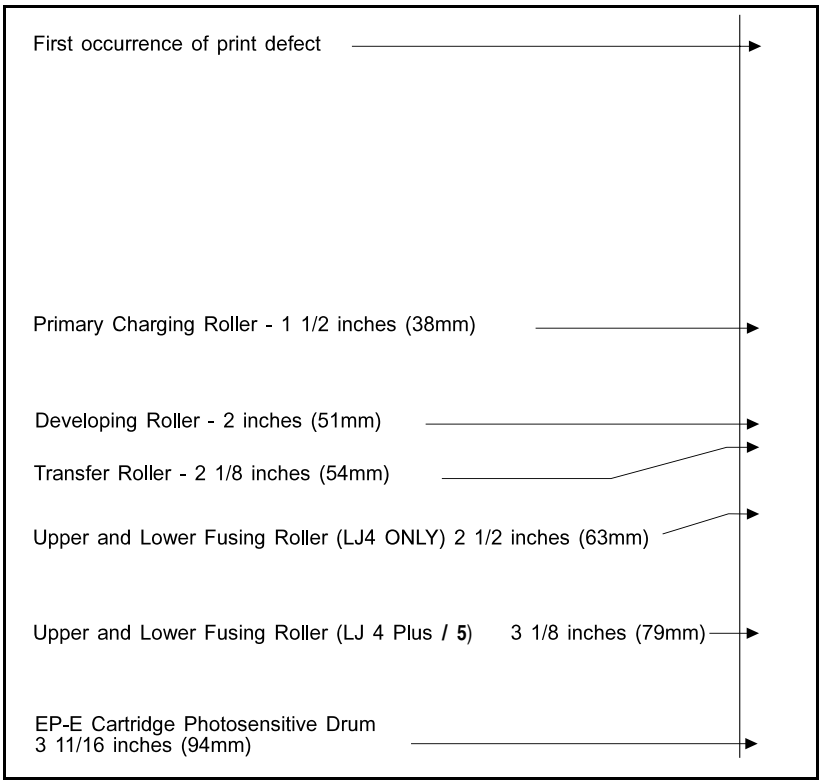

Figure 7-19 Repetitive Defect Ruler

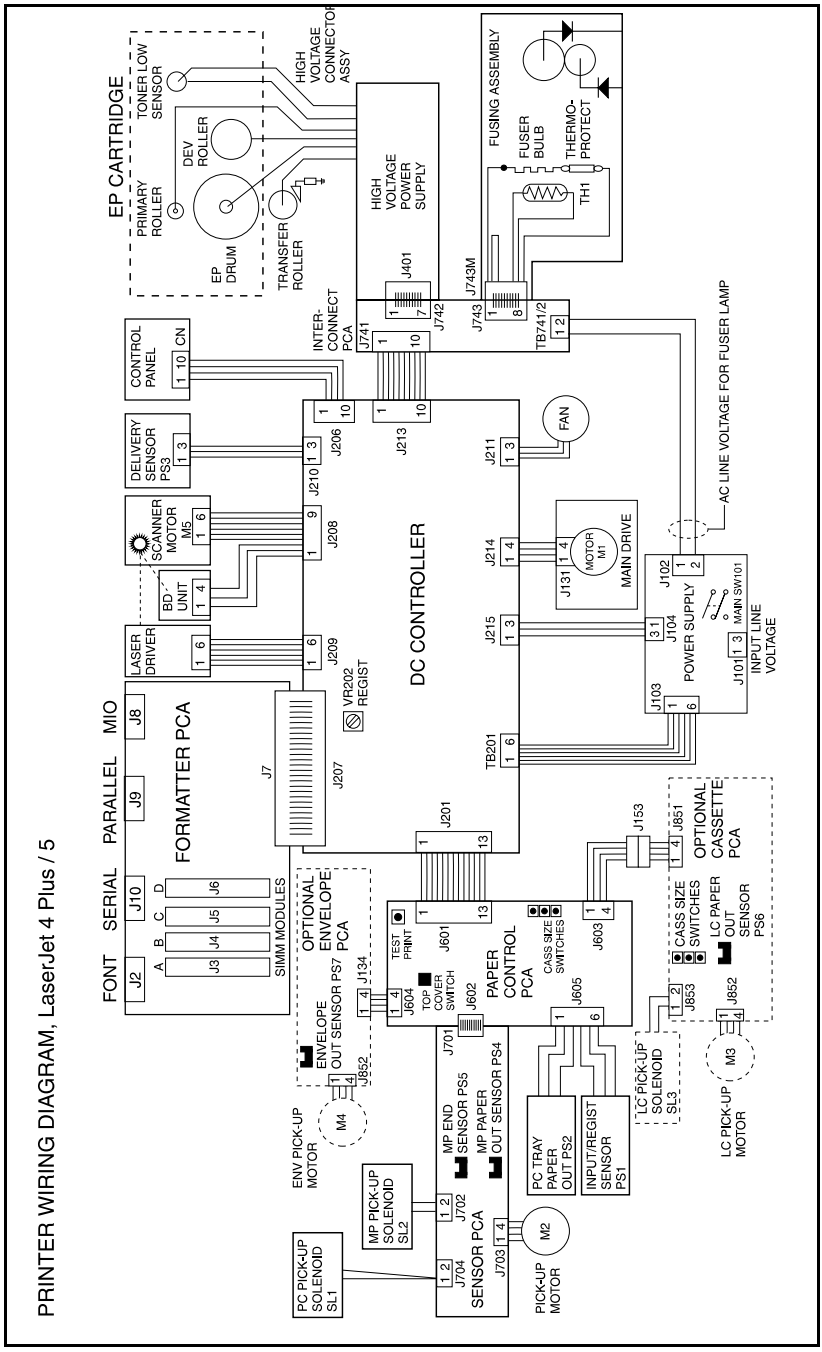

Figure 7-20 Main Wiring Diagram (LJ 4+/5 only)

Voltage Test Points

The operating voltages of the printer can be verified by:

1 Listening for the exhaust fan. A rotating fan indicates that the +5 VDC and +24A VDC voltages are present. (The fan runs on +24A VDC. The +5 VDC enables the +24A VDC.)
2 Listen for the Main Motor. If the Main Motor runs, the +24B VDC is enabled, therefore +24A VDC must be present.

Measuring the DC Voltage Levels

The DC voltage levels can be measured directly on the DC Controller TB 201. TB 201 connects the DC Controller with the Power Supply. (See the Main Wiring Diagram, and Figure 7-16 or 7-17, the DC Controller PCA Layout in the previous section.) Remove the Formatter cage to access the DC Controller. The voltages on TB201 are as follows:

Table 7-39 TB 201Voltages

Voltage	Color	Pin Number
+5 VDC	Brown	1, 2
+24 VDC	Red	3
Ground	Blue	4, 5, 6

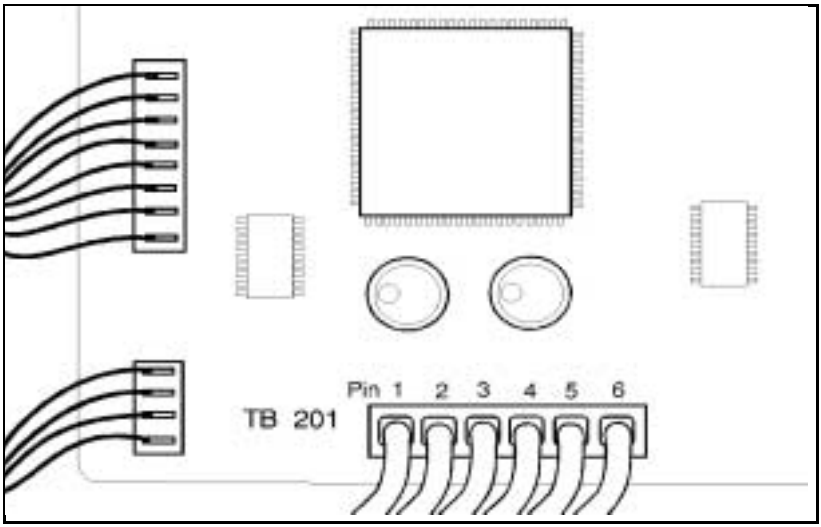

Figure 7-21 TB 201 Voltages

8

Parts and Diagrams

How To Use the Parts Lists

The figures in this chapter illustrate the major subassemblies and component parts of the HP LaserJet 4/4M, LaserJet 4 Plus/ 4M Plus, and LaserJet 5/5M/5N printers. When ordering an electrical part, pay special attention that the part chosen has the correct voltage rating for the machine under repair.

Part numbers with no indicator in the *Notes* column are stocked and can be ordered through Hewlett-Packard's Support Materials Organization (SMO). Parts marked with an **S** in the *Notes* column are special order parts which can be ordered through SMO but may have an eight-week lead time.

An alphanumeric index referencing all part numbers is included at the end of this chapter (see **Parts List**, page 8-40).

Note Not all parts are orderable. The parts listed are the only orderable parts. Parts that have no reference designator or part number are not field-replaceable and cannot be ordered through SMO.

Figures referred to in the tables are placed before the table throughout the chapter.

Accessory Parts are listed on 8-33. This list includes such items as the MIO and SIMM cards.

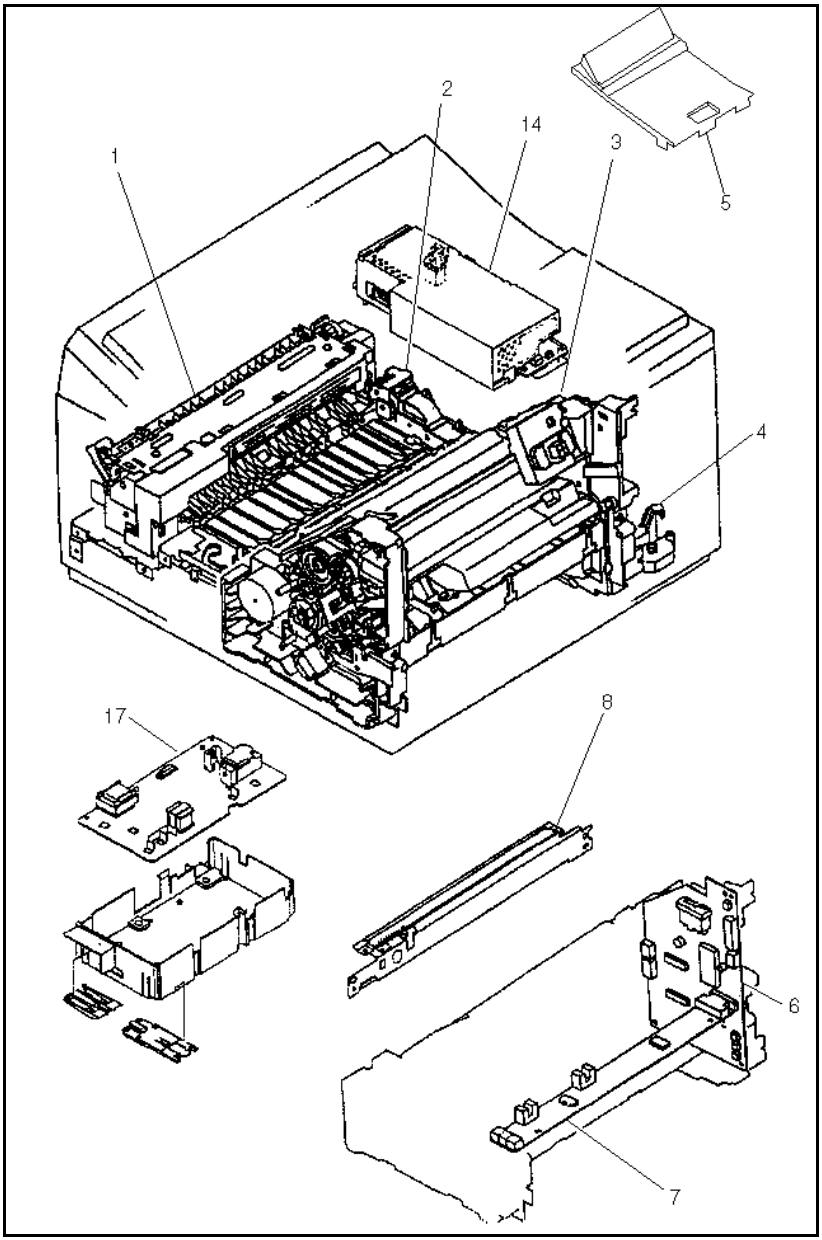

Figure 8-1a Field-Replaceable Assemblies (1 of 2)

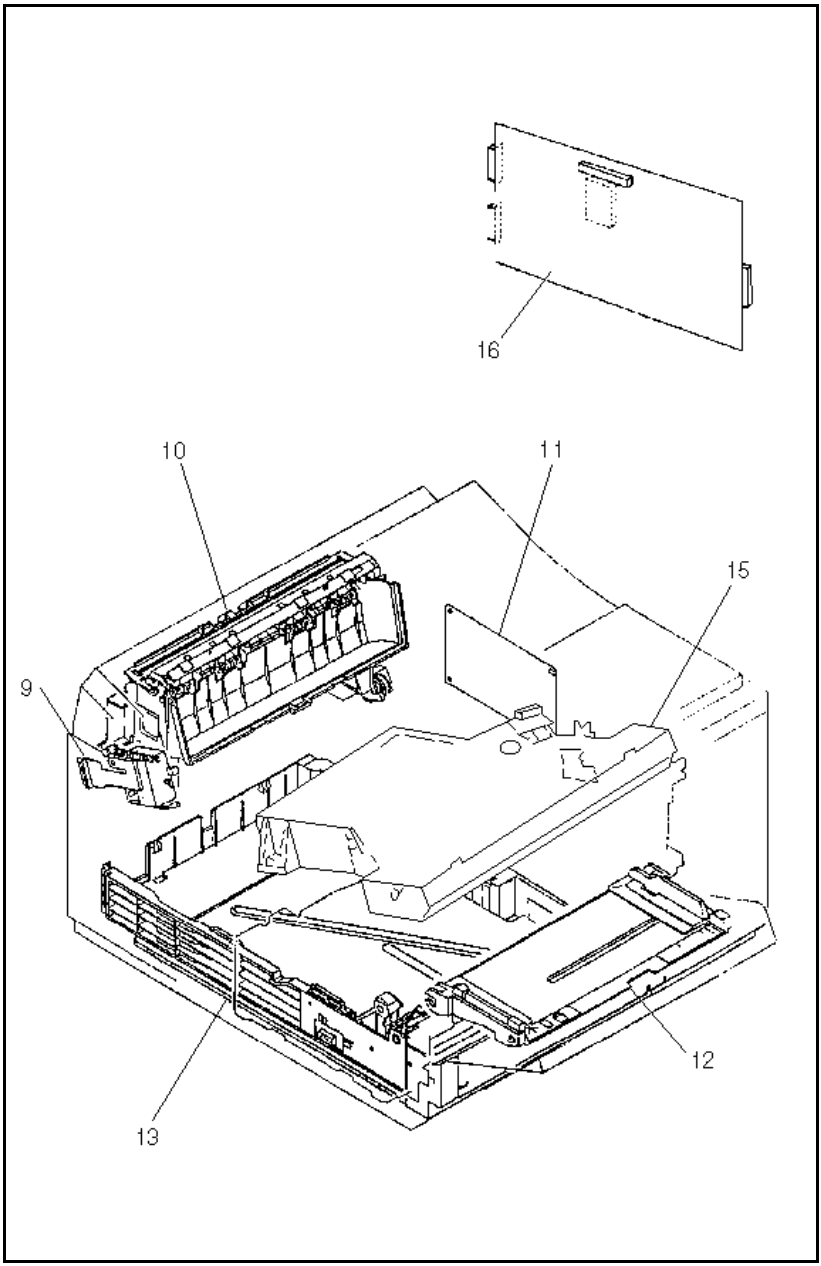

Figure 8-1b Field-Replaceable Assemblies (2 of 2)

Table 8-1 Field-Replaceable Assemblies

Part #	Ref	Exchng #	Description	Fig. #
RG5-0454-000CN RG5-0879-130CN	1	C2001-69003 C2037-69001	Fusing Ass'y (100/110V) LaserJet 4 LaserJet 4 Plus/5	8-10
RG5-0455-000CN RG5-0880-130CN	1	C2001-69004 C2037-69002	Fusing Ass'y (220/240V) LaserJet 4 LaserJet 4 Plus/5	8-10
RH7-1151-000CN RH7-1169-000CN	2		Main Motor LaserJet 4 LaserJet 4 Plus/5	8-4b
RG5-0451-000CN RG5-0877-000CN RG5-2195-000CN	3	C2001-69005 C2037-69003 C3916-69005	Paper Feed Assembly LaserJet 4 LaserJet 4 Plus LaserJet 5	8-6
RB1-2119-000CN RB1-7907-000CN	4		Main Switch Assy LJ 4 & 4+ LJ 5	8-5
RG5-0478-000CN RG5-1076-000CN RG5-2238-000CN	5	C2001-69010 C2037-69005	Display Ass'y w/o overlay LaserJet 4 LaserJet 4 Plus LaserJet 5	8-3
RG5-0512-000CN	6		Paper Control PCA	8-6a
RG5-0514-000CN	7		Sensor PCA	8-6b
RG5-0469-000CN	8		Transfer Guide Assembly	8-1a
RG5-0475-060CN	9		Paper Output Sensor Ass'y	8-9
RG5-0456-000CN RG5-0886-000C RG5-2189-000CN	10		Paper Output Assembly LaserJet 4 LaserJet 4 Plus LaserJet 5	8-8
RG5-0511-000CN RG5-0966-030CN	11	C2001-69002 C2037-69004	DC Controller PCA LaserJet 4 LaserJet 4 Plus/5	8-1b
RG5-0472-000CN RG5-0888-000CN RG5-2199-000CN	12		MP Tray (Tray 1) LaserJet 4 LaserJet 4 Plus LaserJet 5	8-7

Table 8-1 Field-Replaceable Assemblies (continued)

Part #	Ref	Exchng #	Description	Fig. #
C2085B C2085E C3925A	13		PC Tray (Tray 2) (ltr) LaserJet 4 LaserJet 4 Plus LaserJet 5	8-14
C2085C C2085F C3926A	13		PC Tray (Tray 2) (A4) LaserJet 4 LaserJet 4 Plus LaserJet 5	8-14
RG5-0531-000CN RG6-2499-000CN	14	C2001-69007 C2037-69006	Power Supply (100/120V) LaserJet 4 LaserJet 4 Plus/5	8-1a
RG5-0553-000CN RG5-2500-000CN	14	C2001-69008 C2037-69007	Power Supply (220/240V) LaserJet 4 LaserJet 4 Plus/5	8-1a
RG5-0449-000CN RG5-0903-070CN	15	C2001-69006 C2037-69008	Laser/Scanner Ass'y LaserJet 4 LaserJet 4 Plus/5	8-1b
C2002-67901 C2038-60004 C3919-67901	16	C2002-69001 C2038-69004 C3919-69001	Formatter PCA LaserJet 4 LaserJet 4 Plus LaserJet 5	8-1b
RG5-0513-000CN RG5-0969-040CN	17	C2001-69009 C2037-69009	High Voltage Power Supply LaserJet 4 LaserJet 4 Plus/5	8-1a

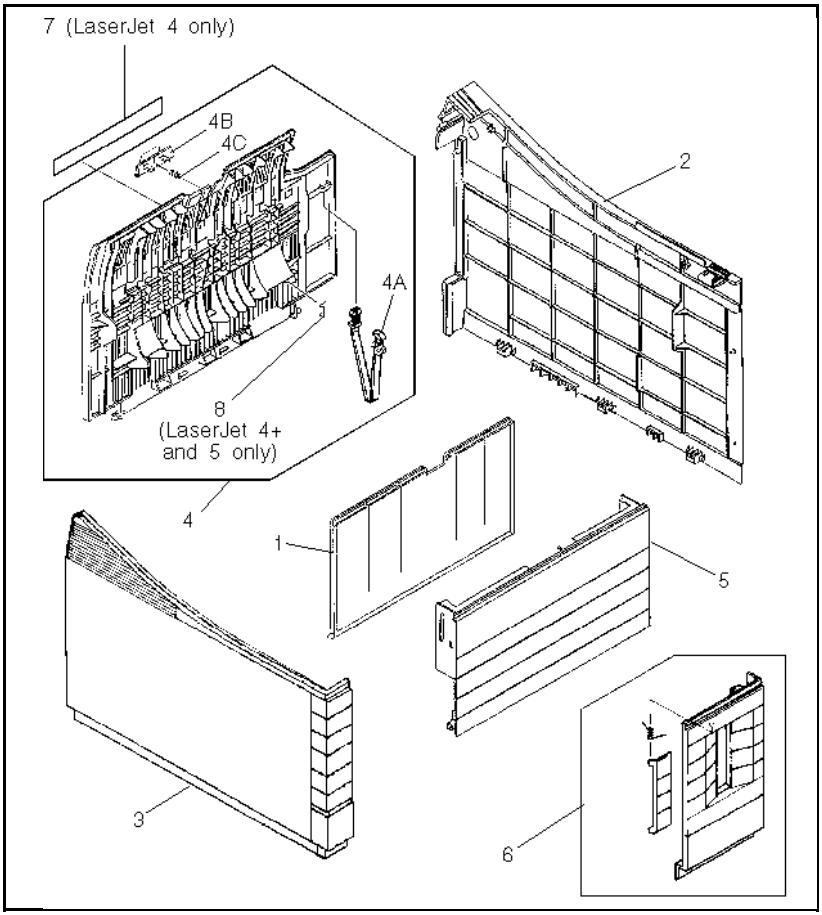

Figure 8-2 Covers and Panels

Table 8-2 Covers and Panels

Ref	Part #	Notes	Description
1	RB1-2143-000CN RB1-3558-000CN RB1-7885-000CN	LJ4 LJ4+ LJ5	MP Tray Extender
2	RB1-2346-000CN RB1-3470-000CN RF5-1644-000CN	LJ4 LJ4+ LJ5	Right Cover
3	RB1-2347-000CN RB1-3471-000CN RB1-7881-000CN	LJ4 LJ4+ LJ5	Left Cover
4	RF5-0533-000CN RF5-0733-000CN RF5-1645-000CN	LJ4 LJ4+ LJ5	Rear Door Assembly
4A	RB1-2354-000CN		Rear Door Support Strap
4B	RB1-2335-000CN RB1-7890-000CN	LJ4/4+ LJ5	Rear Door Latch
4C	RS5-2219-000CN RS5-2571-000CN	LJ4/4+ LJ5	Rear Door Spring
5	RB1-2351-000CN RB1-3559-000CN RB1-7886-000CN	LJ4 LJ4+ LJ5	MP Door
6	RG5-0459-000CN RB1-7889-000CN	LJ4/4+ LJ5	Font Door Cover Right Front Cover
7	RS5-8205-000CN	LJ4	Label 110/115V
7	RS5-8916-000CN	LJ4	Label 220/240V
8	RB1-3475-000CN	LJ4+	Rear Door Retainer

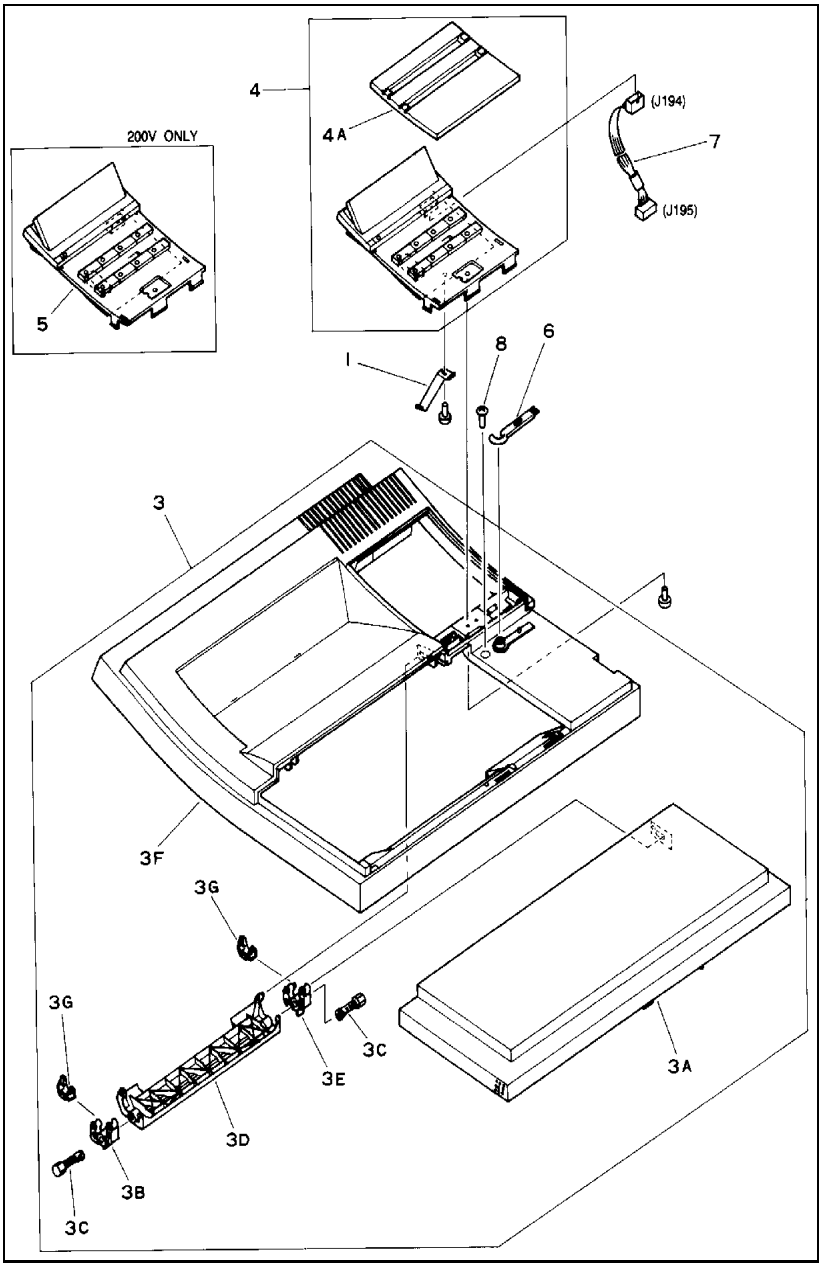

Figure 8-3a Top Cover Assembly for LaserJet 4/4+

Table 8-3a Top Cover Assembly

Ref	Part #	Notes	Description
1	RB1-2330-000CN	S	Spring, Leaf
3	RG5-0458-000CN RG5-0872-000CN	LJ4 LJ4+	Upper Cover Assembly
3A	RB1-2322-000CN RB1-3474-000CN	LJ4 LJ4+	Top Cover Door
3B	RB1-2323-000CN		Hinge, Bracket
3C	RB1-2324-000CN	2 ea.	Hinge, Pin
3D	RB1-2329-000CN RB1-3473-000CN	LJ4 LJ4+	Hinge, Arm
3E	RB1-2364-000CN		Hinge, Bracket
3F	RF5-0360-000CN RF5-0732-000CN	LJ4 LJ4+	Cover, Upper
3G	RB1-2314-000CN	2 ea.	Stop, Hinge
4	RG5-0533-000CN C2001-69010 RG5-1077-000CN C2037-69005	LJ4 Exchange LJ4+ Exchange	Display Ass'y (English)
4A	RB1-2359-000CN RB1-3476-000CN	LJ4 LJ4+	Overlay (English)
	Exchange Part Numbers		Overlays
4A	C2001-40001 C2001-40002 C2001-40003 C2001-40004 C2001-40005 C2001-40006 C2001-40007 C2001-40008 C2001-40009 C2001-40010 C2001-40011 C2001-40012 C2001-40013 C2037-40014	LJ4	English French German Italian Spanish Norwegian Swedish Danish Finnish Dutch Polish Turkish Portugese European English

Ref	Part #	Notes	Description
4A	C2037-40001 C2037-40002 C2037-40003 C2037-40004 C2037-40005 C2037-40006 C2037-40007 C2037-40008 C2037-40009 C2037-40010 C2037-40011 C2037-40012 C2037-40013 C2037-40014	LJ4+	English French German Italian Spanish Norwegian Swedish Danish Finnish Dutch Polish Turkish Portugese European English
5	RG5-0478-000CN RG5-1076-000CN	LJ4 LJ4+	Display Ass'y (W/O overlay)
6	RB1-2260-000CN		Brush, cleaning
7	RG5-0519-000CN RG5-0982-000CN	LJ4 LJ4+	Cable, Display Panel
8	XA9-0591-000CN		Screw with Washer (M3 x 8)

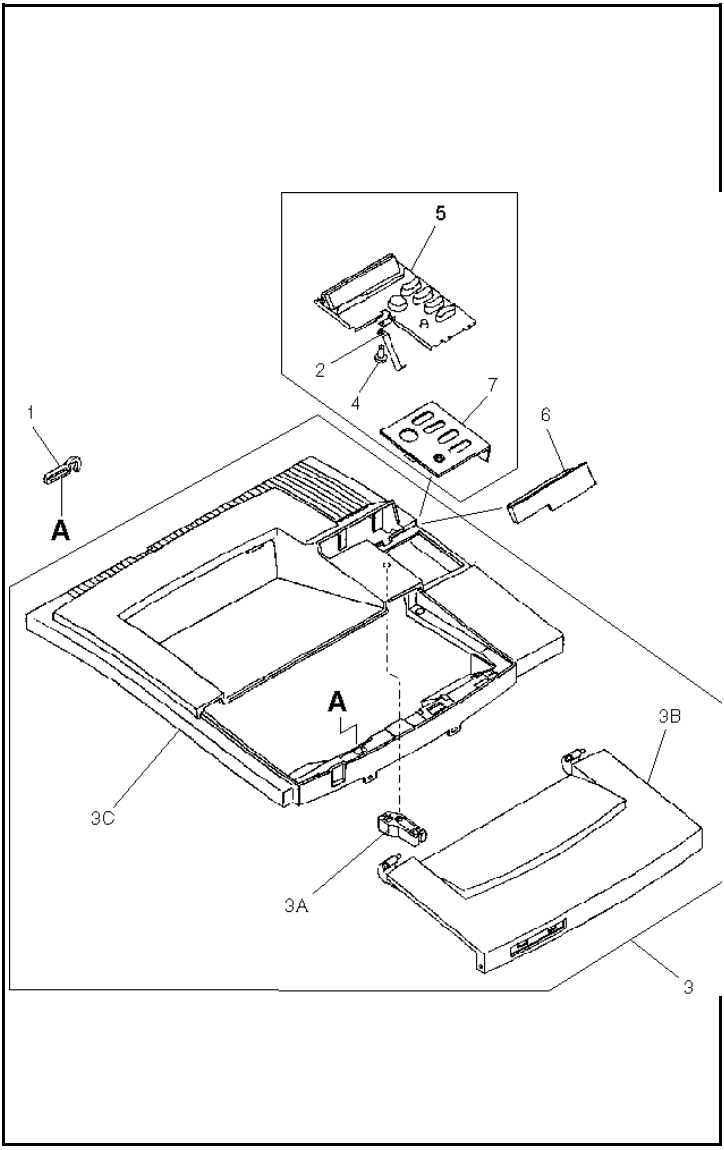

Figure 8-3b Top Cover Assembly for LaserJet 5

Table 8-3b Top Cover Assembly

Ref	Part #	Notes	Description
1	RB1-7895-000CN		Tool, Hook
2	RB1-7893-000CN	S	Spring, Leaf
3	RG5-2186-000CN		Upper Cover Assembly
3A	RB1-7894-000CN		Hinge Stop
3B	RB1-7883-000CN		Top Cover Door
3C	RF5-1643-000CN		Cover, Upper
	RG5-0982-000CN		Cable, Control Panel (not shown)
5	RG5-2238-000CN		Display Ass'y (W/O overlay)
6	RB1-7887-000CN		Display Cover (part of item 3)
	Part Numbers		Overlay Language
7	C3916-40005		English
	C3916-40006		French
	C3916-40007		Italian
	C3916-40008		German
	C3916-40009		Spanish
	C3916-40010		Norwegian
	C3916-40011		Danish
	C3916-40012		Portugese
	C3916-40013		Dutch
	C3916-40014		Finnish
	C3916-40015		Polish
	C3916-40016		Swedish
	C3916-40017		Traditional Chinese
	C3916-40018		Korean
	C3916-40019		Simplified Chinese
	C3916-40020		Turkish
	C3916-40021		Japanese
	C3916-40022		Hungarian
	C3916-40023		Czechoslovakian
	C3916-40025		Thai
	C3916-40026		Russian

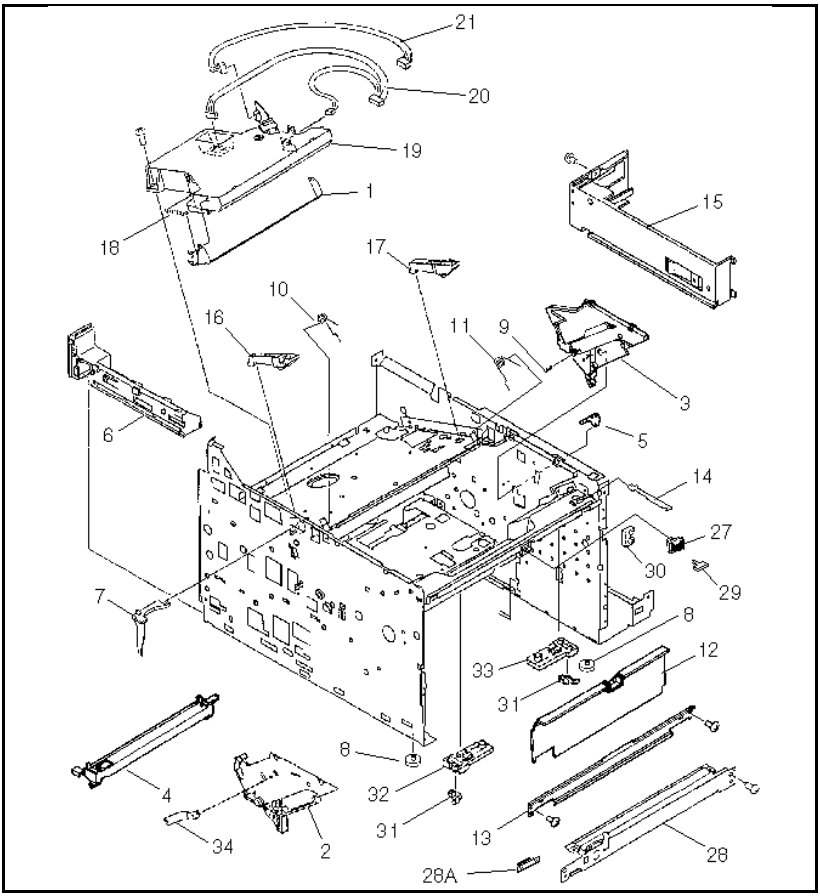

Figure 8-4a **Internal Components (1 of 4)**

Table 8-4a Internal Components (Section 2)

Ref	Part #	Notes	Description
1	RB1-2080-000CN		Shutter, laser
2	RB1-2100-000CN RB1-5730-000CN	LJ4/4+ LJ5	Guide, Cartridge
3	RB1-2101-020CN		Guide, Cartridge
4	RB1-2105-030CN		Support, Cartridge
5	RB1-2106-000CN	S	Plate, grounding
6	RB1-2107-000CN RB1-7913-000CN	LJ4/4+ LJ5	Guide, Cassette, Left

7	RB1-2111-030CN		Shutter, arm
8	RB1-2114-000CN	Qty 5	Foot
9	RS5-2218-000CN		Spring, Compression
10	RB1-2122-000CN		Shutter Spring, Torsion
11	RB1-5732 -000CN		Spring, Torsion
12	RB1-2141-000CN RB1-7888-000CN	LJ4/4+ LJ5	Cover, Inner
13	RB1-2353-000CN RF5-1648-000CN	LJ4/4+ LJ5	Holding Plate
13A	RB1-7901-000CN	LJ5	Mount, Tray 1 Door (not shown-part of 13)
14	RB1-2358-000CN RB1-2966-000CN	LJ4/4+ LJ5	Spring, Switch
15	RF5-0363-000CN RF5-1079-000CN RF5-1657-000CN	LJ4 LJ4+ LJ5	Guide, Cassette, Right
16	RF5-0365-000CN RB1-7917-000CN	LJ4/4+ LJ5	Plate, Pressure, Left
17	RF5-0366-000CN RB1-7918-000CN	LJ4/4+ LJ5	Plate, Pressure, Right
18	RS5-2170-000CN	Qty 2	Spring, Tension
19	RG5-0449-000CN RG5-0903-070CN	LJ4 LJ4+/5	Laser/Scanner Ass'y
19	C2001-69006 C2037-69008	LJ4 LJ4+/5	Laser/Scanner Ass'y (exchng)
20	RG5-0520-000CN RG5-0975-000CN	LJ4 LJ4+/5	Cable, D.C. Cont/Scanner
21	RG5-0556-000CN RG5-0976-000CN	LJ4 LJ4+/5	Cable, D.C. Cont/laser
27	RB1-2125-000CN RB1-3560-000CN	LJ4 LJ4+	Holder, Latch
28	RG5-0469-020CN		Transfer Guide Ass'y
28A	RB1-2237-020CN		Static Eliminator
29	XZ9-0340-000CN XZ9-0379-000CN	LJ4 LJ4+	Front Door Latch
30	RB1-7908-000CN	LJ 4+/5	Cable Clip
31	RB1-7902-000CN	LJ5	Click, Tray 1 Door (Qty 2)
32	RB1-7903-000CN	LJ5	Guide, Click, Left
33	RB1-7923-000CN	LJ5	Guide, Click, Right
34	RB1-5731-000CN	LJ5	Spring, Left Cartridge Guide

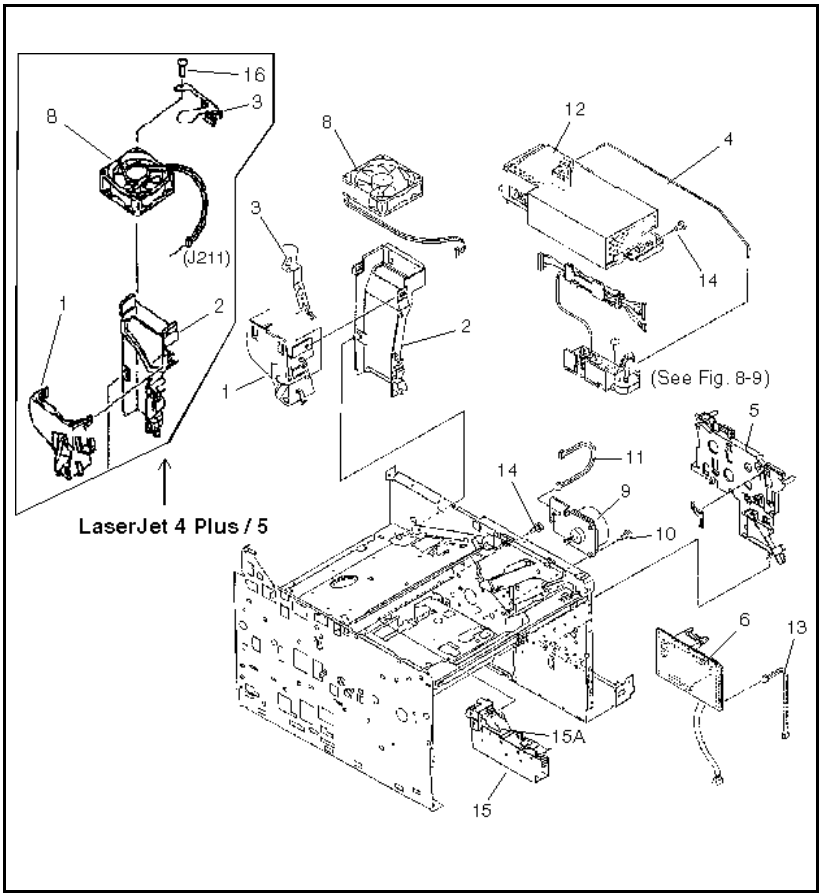

Figure 8-4b Internal Components (2 of 4)

Table 8-4b Internal Components (Section 2)

Ref	Part #	Notes	Description
1	RB1-2112-000CN RB1-3544-000CN	LJ4 LJ4+/5	Exhaust Duct
2	RB1-2113-000CN RF5-0748-000CN	LJ4 LJ4+/5	Exhaust Duct Cover
3	RB1-2350-000CN RB1-3547-000CN	LJ4 LJ4+/5	Exhaust Fan Cover
4	RB1-2352-000CN RB1-7896-000CN	LJ4/4+ LJ5	Rod
5	RF5-0470-000CN RF5-0743-000CN RF5-1653-000CN	LJ4 LJ4+ LJ5	Mount, DC Controller
6	RG5-0511-000CN RG5-0966-030CN	LJ4 LJ4+/5	DC Controller PCA
6	C2001-69002 C2037-69004	LJ4 LJ4+/5	DC Controller PCA (exchange)
8	RH7-1143-000CN RH7-1177-000CN RH7-1178-000CN	LJ4 LJ4+ LJ5	Exhaust Fan
9	RH7-1151-000CN RH7-1169-000CN	LJ4 LJ4+/5	Motor, Main Drive
10	XA9-0585-000CN	4 ea	Screw w/washer
11	RG5-0538-000CN RG5-0978-000CN	LJ4 LJ4+/5	Cable, Main Motor
12	RG5-0531-000CN RG5-2499-000CN	LJ4 LJ4+/5	Power Supply Assembly 100/115V
12	C2001-69007 C2037-69006	LJ4 LJ4+/5	Power Supply Assembly (exchng) 100/115V
12	RG5-0553-000CN RG5-2500-000CN	LJ4 LJ4+/5	Power Supply Assembly 220/240V
12	C2001-69008 C2037-69007	LJ4 LJ4+/5	Power Supply Assembly (exchng) 220/240V
13	RG5-0526-000CN		Cable, Low Voltage, Fuser Drive
14	FA9-1449-000CN XA9-0267-000CN	LJ4 (4 ea.) LJ4+/5 (2 ea.)	Screw, w/ washer
15	RG5-0457-000CN RG5-0876-050CN	LJ4 LJ4+/5	Drive Gear Ass'y
15A	RB1-2318-000CN RB1-3481-020CN	LJ4 LJ4+/5	Drive Gear Cover
16	XA9-0668-000CN	LJ4+/5	Screw w/ washer, M3X29.5

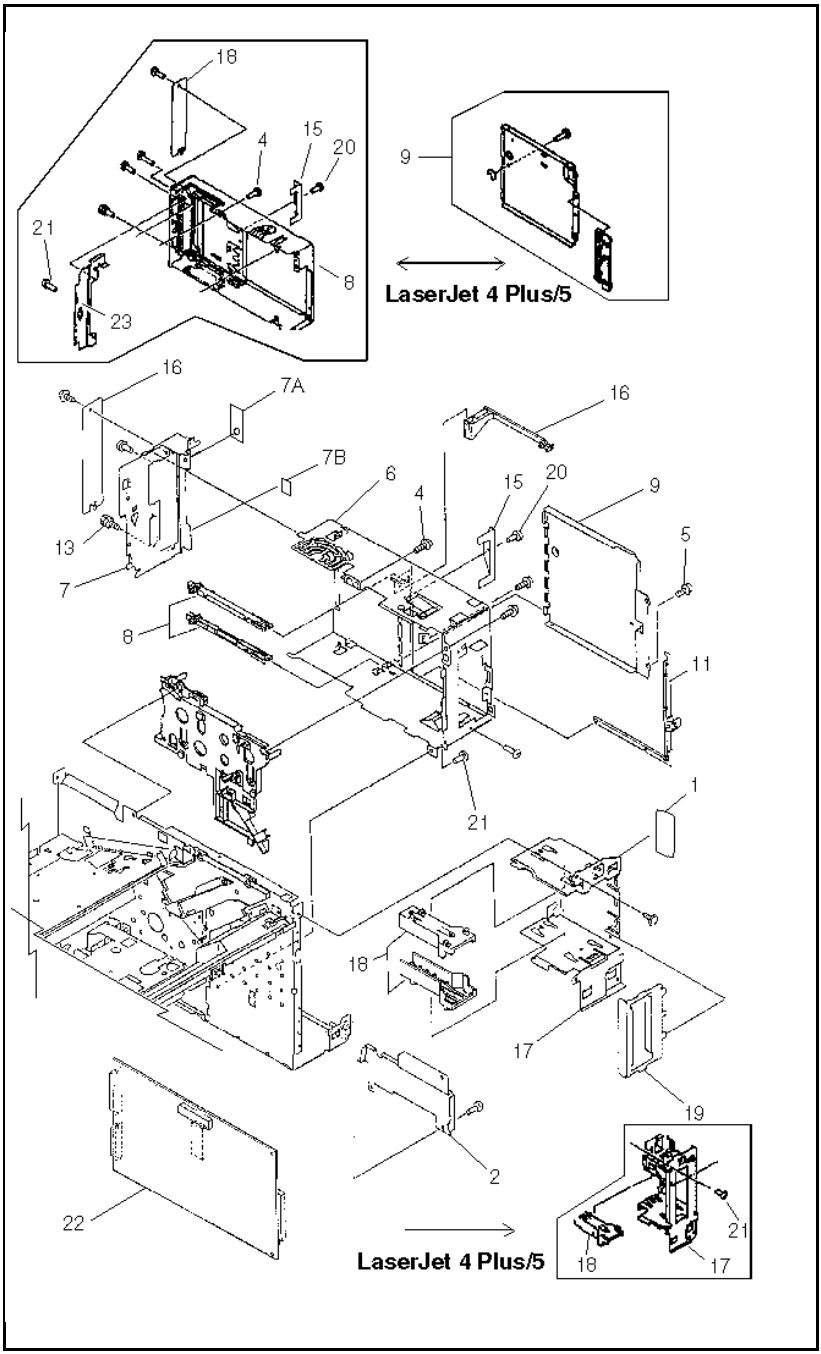

Figure 8-4c Internal Components (3 of 4)

Table 8-4c Internal Components (Section 3)

Ref	Part #	Notes	Description
1	RS5-8219-000CN	S	Label
2	RB1-2357-000-CN RB1-7897-000CN	LJ4/4+ LJ5	Cover, Connector
4	XA9-0584-000CN XA9-0670-000CN	LJ4 LJ4+/5	Screw, w/ spring washer
5	XA9-0574-000CN		Screw, 5mm hex head
6	RF5-0471-000CN RF5-0746-000CN RF5-1647-000CN	LJ4 LJ4+ LJ5	Plate, Shield
7	RF5-0355-000CN	LJ4	Panel, I/O
7A	RB1-2312-000CN	LJ4	Sheet
7B	RB1-2313-000CN	LJ4	Sheet
8	RB1-2341-000CN	S	Guide, I/O Option, (LJ4 only)
9	RB1-2343-000CN RF5-0739-000CN RF5-1654-000CN	LJ4 LJ4+ LJ5	Cover, SIMM Board
11	RB1-2363-000CN	S	Cover, Edge, (LJ4 only)
13	XA9-0400-000CN XA9-0704-000CN	LJ4 LJ4+/5	Lock, Nut
15	RB1-2365-000CN RB1-3493-000CN	LJ4 LJ4+/5	Plate, PCA Holding
16	RB1-2366-000CN	S	Cover, Option board
17	RB1-2366-000CN RB1-3496-000CN RB1-7898-000CN	LJ4 LJ4+ LJ5	Shield, Font Cover Shield, Cover
18	RB1-2337-000CN RB1-3497-000CN	LJ4 LJ4+	Guide, Font Cartridge
19	RB1-2338-000CN	S	Plate, Shield, (LJ4 only)
20	XB6-7300-409CN XA9-0670-000CN	LJ4 LJ4+/5	Screw, M3x4 Screw, M3x6
21	XA9-0617-000CN XA9-0267-000CN	LJ4 LJ4+/5	Screw, M3x6

Ref	Part #	Notes	Description
22	C2002-67901 C2038-60004 C3919-67901	LJ4 LJ4+ LJ5	Formatter PCA
22	C2002-69001 C2038-69004 C3919-69001	LJ4 LJ4+ LJ5	Formatter PCA (Exchange)
23	RB1-3494-000CN RB1-7892-000CN	LJ4+ LJ5	Plate, Reinforcement

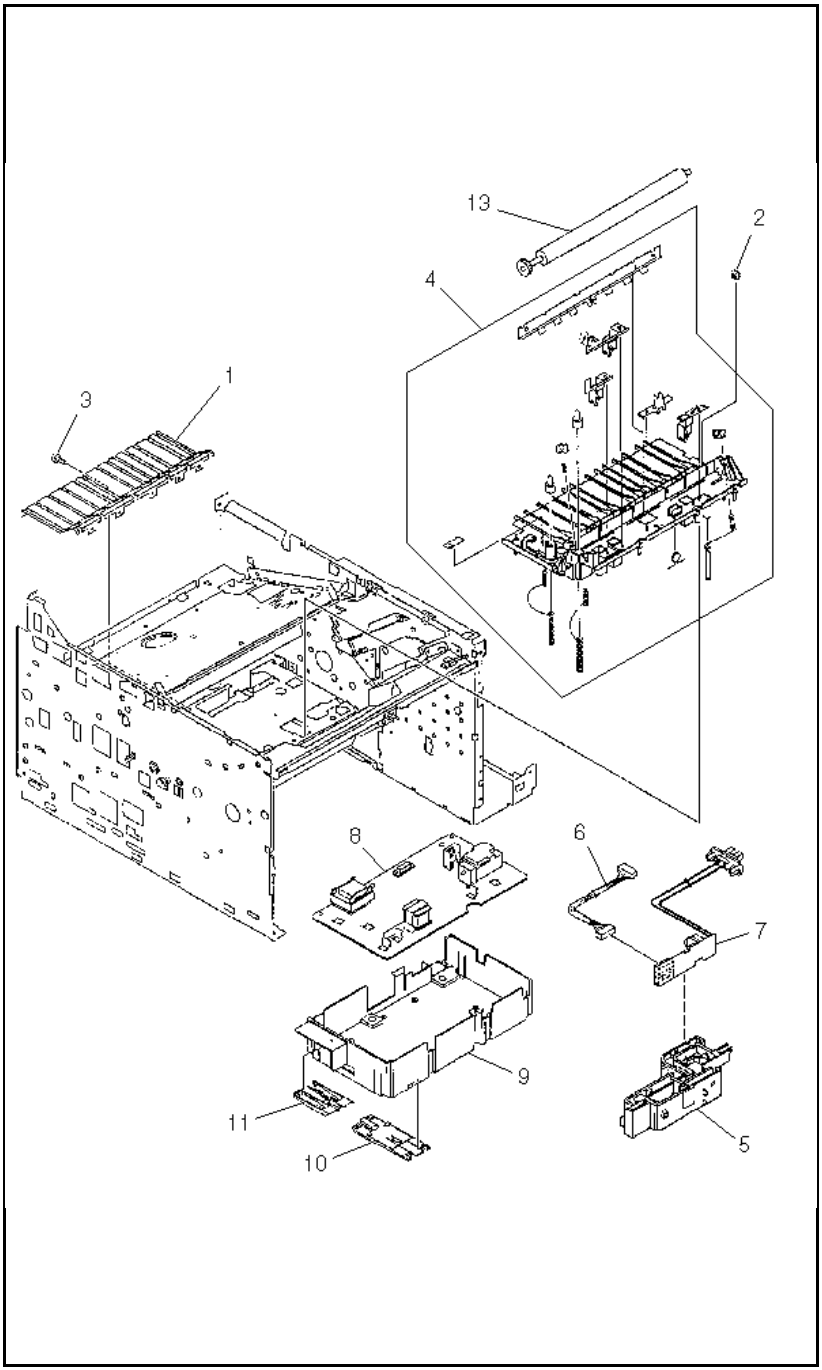

Figure 8-4d Internal Components (4 of 4)

Table 8-4d Internal Components (Section 4)

Ref	Part #	Notes	Description
1	RB1-2236-000CN		Guide, Feeder
2	RB1-2253-000CN		Roller, Guides (6)
3	XA9-0623-000CN		Hex Head Screw
4	RG5-0468-000CN RG5-2192-000CN	LJ4/4+ LJ5	Transfer Block Ass'y
5	RB1-2251-000CN		Block, Connecting
6	RG5-0521-000CN RG5-0979-000CN	LJ4 LJ4+/5	Cable, D.C. Controller /Interconnect PCA
7	RG5-0515-000CN		Connector PCA Ass'y
8	RG5-0513-000CN RG5-0969-040CN	LJ4 LJ4+/5	High Voltage PCA
8	C2001-69009 C2037-69009	LJ4 LJ4+/5	High Voltage PCA (exchng)
9	RB1-2226-000CN		Cover, High Voltage
10	RF5-0369-040CN		Holder, Paper, Front
11	RB1-2259-040CN		Holder, Paper, Rear
13	RF5-0349-000CN		Roller, Transfer

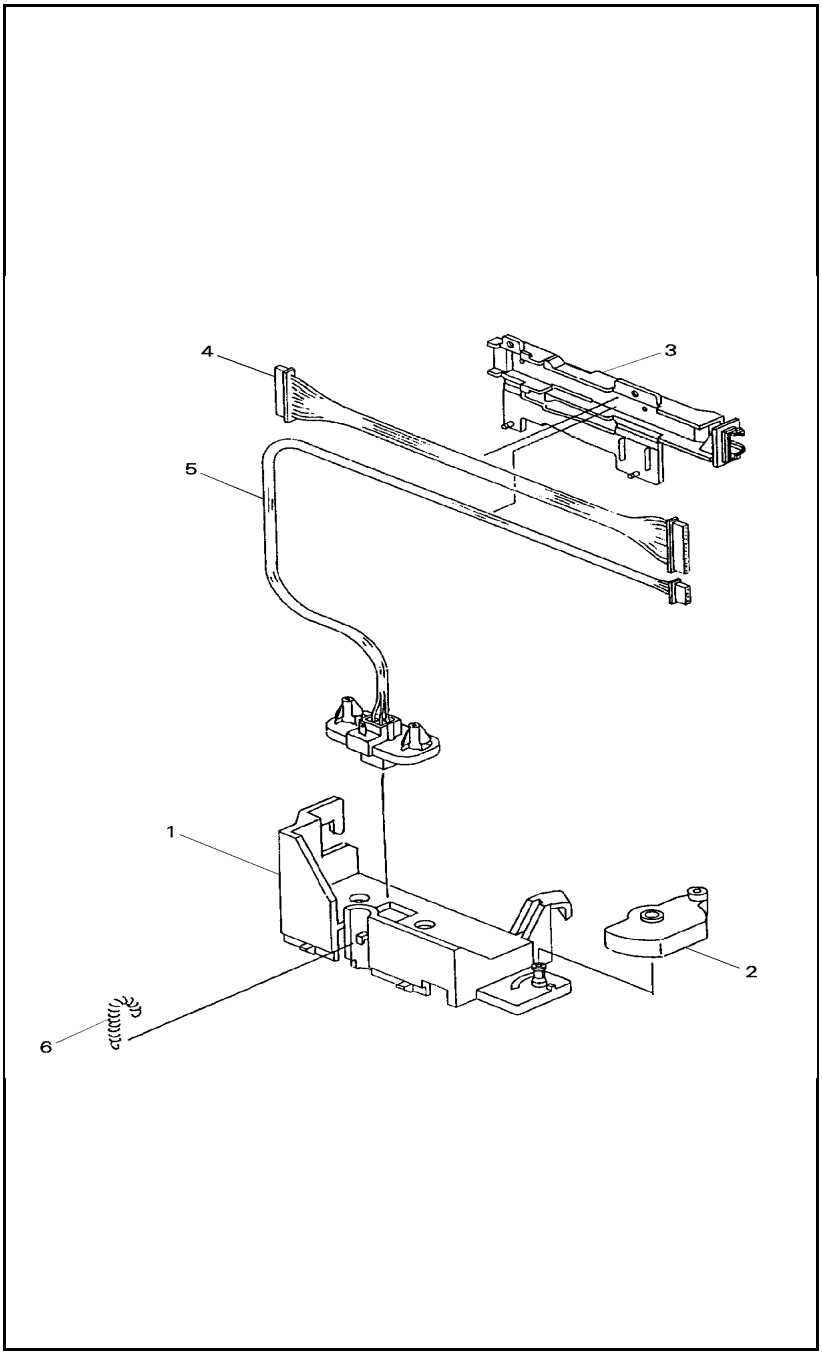

Figure 8-5 Main Switch Assembly

Table 8-5 Main Switch Assembly

Ref	Part #	Notes	Description
1	RB1-2118-000CN RB1-7906-000CN	LJ4/4+ LJ5 S	Base, Switch Mounting
2	RB1-2119-000CN RB1-7907-000CN	LJ4/4+ LJ5 S	Switch
3	RB1-2345-000CN	S	Cover (LJ4/4+ only)
4	RG5-0524-000CN	J201/ J601	Cable, Paper Control PCA/ DC Controller
5	RG5-0530-000CN	J603/ J135	Cable, Lower Feed Assembly

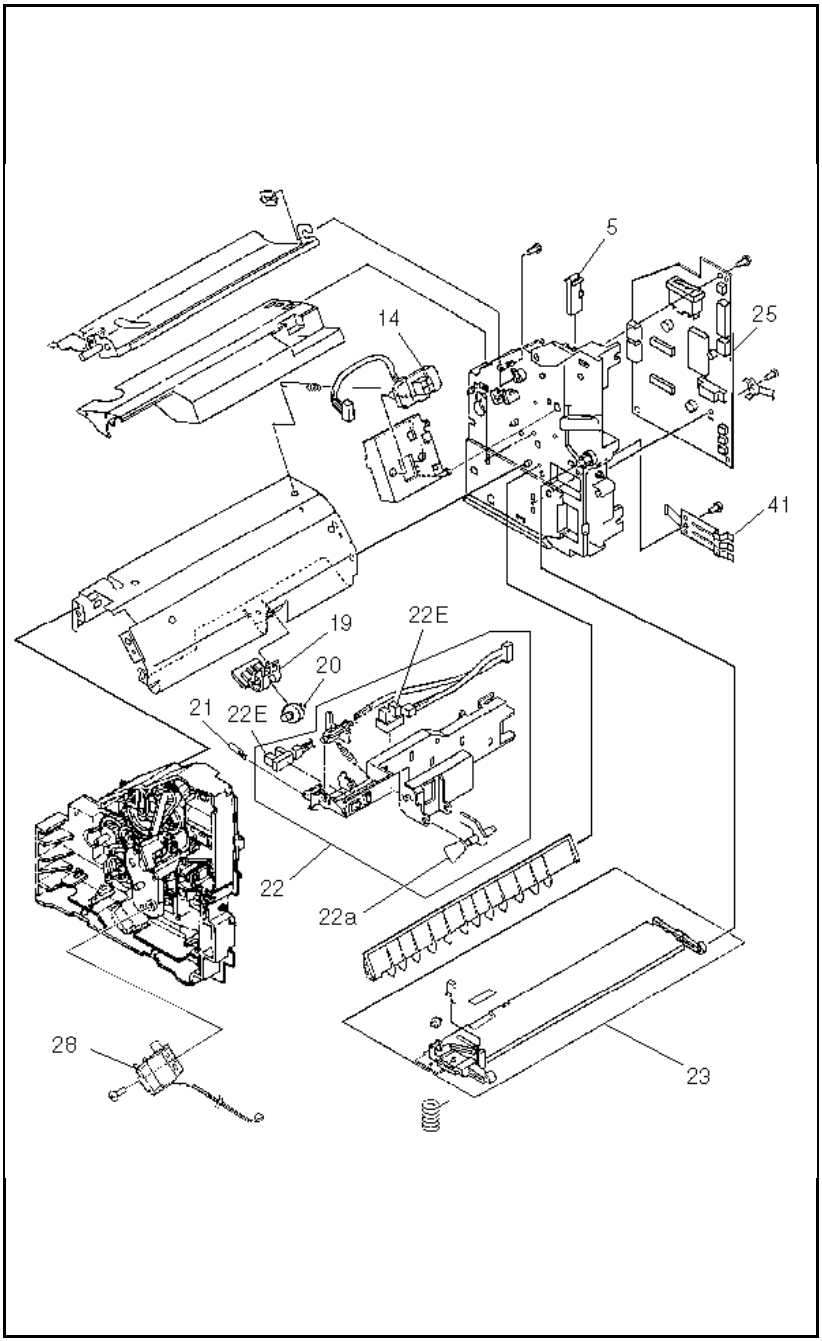

Figure 8-6a Paper Feed Assembly (1 of 2)

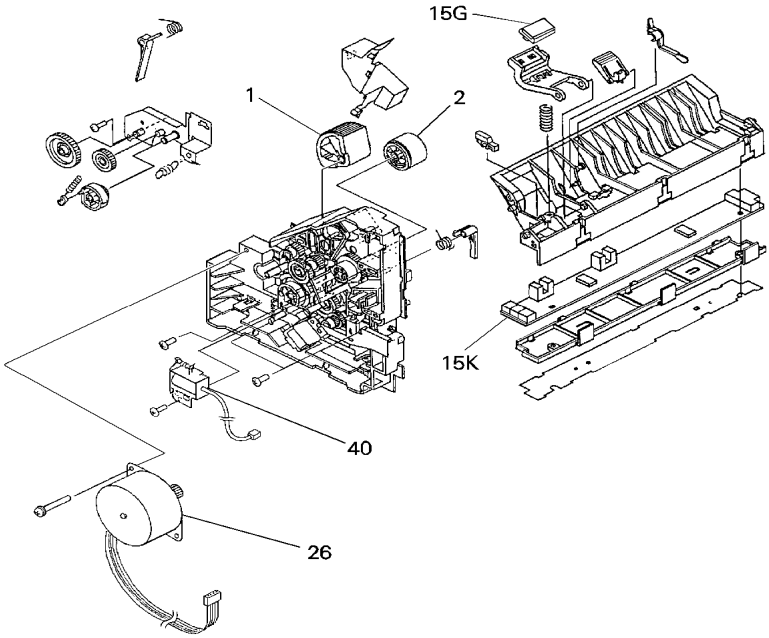

Figure 8-6b Paper Feed Assembly (2 of 2)

Table 8-6 Paper Feed Assembly

Ref	Part #	Notes	Description
	RG5-0451-000CN RG5-0877-000CN RG5-2195-000CN	LJ4 LJ4+ LJ5	Paper Feed Assembly
	C2001-69005 C2037-69003 C3916-69005	LJ4 LJ4+ LJ5	Paper Feed Ass'y (exchng)
1	RB1-2126-000CN RB1-3477-000CN RB1-7911-000CN	LJ4 LJ4+ LJ5	Roller, Pickup, PC Tray Roller, Pickup, Tray 2
2	RB1-2127-000CN RB1-2205-000CN	LJ4/4+ LJ5	Roller, MP Tray Pickup Roller, Tray 1 Pickup
5	RB1-2138-000CN		Lever, Switch
14	RG5-0529-000CN		Cable, Env. Feeder
15G	RF5-0343-000CN		Pad, Separation
15K	RG5-0514-000CN		PCA, Sensor (PS4, PS5)
19	RB1-2181-000CN		Holder, Guide Roller
20	RB1-2182-000CN		Roller, Guide
21	RB1-2179-000CN		Pin, Sensor Holder
22	RG5-0466-000CN		Assembly, Sensor Holder
22A	RB1-2133-000CN		Paper Sensor Flag
22E	WG8-0291-000CN	Qty 2	Photo-Sensor (PS1, PS2)
23	RG5-0467-060CN		Assembly, MP Tray (Tray 1) Base
25	RG5-0512-070CN		Paper Control PCA
26	RH7-1136-000CN RH7-1197-000CN	LJ4 LJ4+/5	Motor, Paper Pickup
28	RH7-5070-000CN RH7-5071-000CN	LJ4 LJ4+/5	PC (Tray 2) Pickup Solenoid (SL1)
40	RH7-5074-000CN RH7-5075-000CN	LJ4 LJ4+/5	MP (Tray 1) Pickup Solenoid (SL2)
41	RB1-2139-030CN		Paper Sensor Leaf Spring

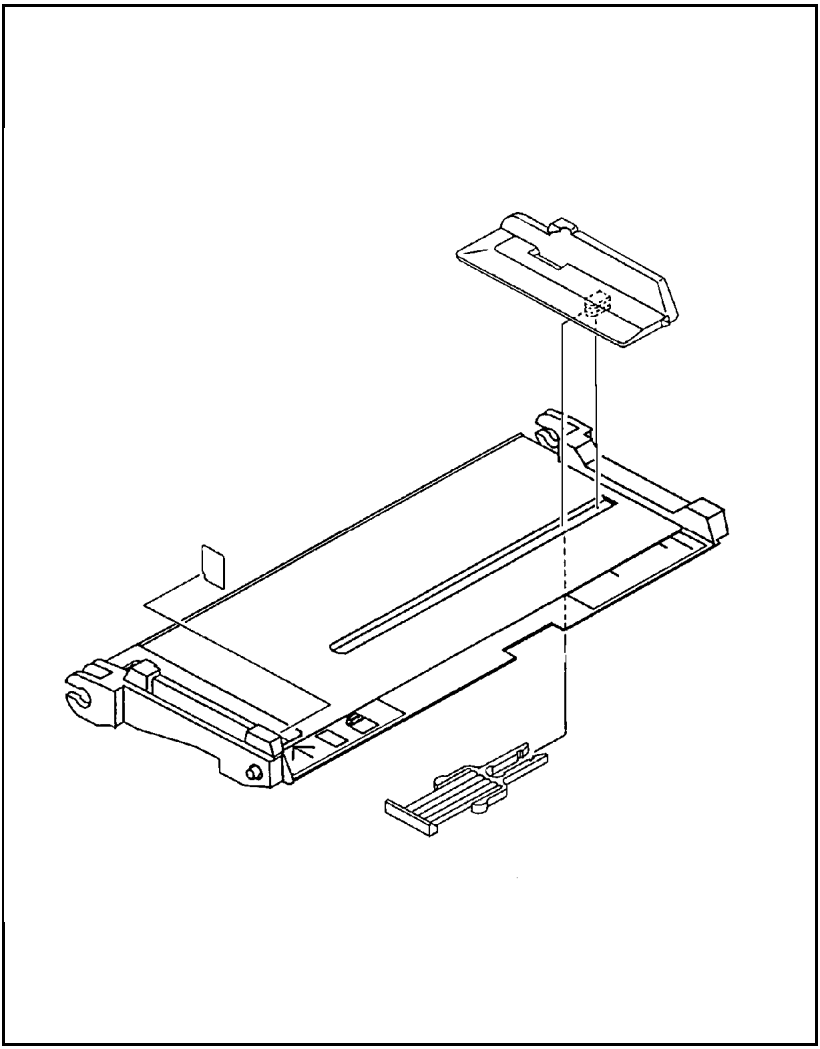

Figure 8-7 **MP Tray (Tray 1) Assembly**

Table 8-7 MP Tray (Tray 1) Assembly

Part #	Notes	Description
RG5-0472-000CN	LJ4	Multi-Purpose Tray Assembly
RG5-0888-000CN	LJ4+	
RG5-2199-000CN	LJ5	Tray 1 Assembly

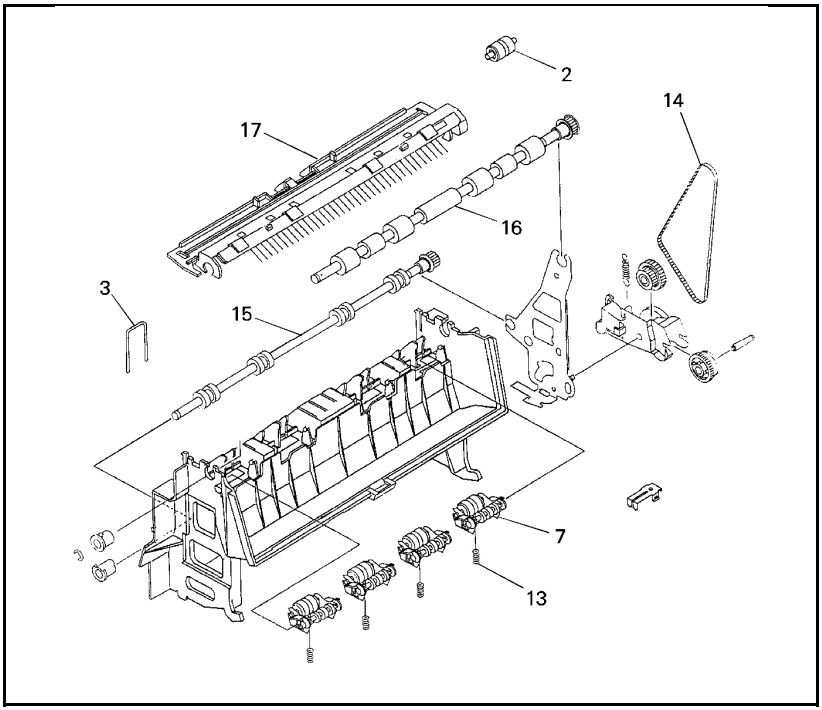

Figure 8-8 Paper Output Assembly

Table 8-8 Paper Output Assembly

Ref	Part #	Notes	Description
	RG5-0456-000CN RG5-0886-000CN RG5-2189-000CN	LJ4 LJ4+ LJ5	Paper Output Assembly
2	RB1-2299-030CN	4 ea.	Rollers, Delivery
3	RB1-2302-000CN	4 ea.	Spring, Roller
7	RF5-0425-040CN	4 ea.	Holder, Roller
13	RS5-2185-000CN RS5-2267-000CN	LJ4 LJ4+/5 4 ea.	Spring, Compression
14	XF9-0410-000CN		Belt, Timing
15	RF5-0438-000CN RF5-1077-030CN	LJ4 LJ4+/5	Roller, Lower Delivery
16	RF5-0534-000CN RF5-1076-020CN	LJ4 LJ4+/5	Roller, Upper Delivery
17	RF5-0532-000CN RF5-0647-000CN	LJ4/4+ LJ5	Upper Guide, Delivery

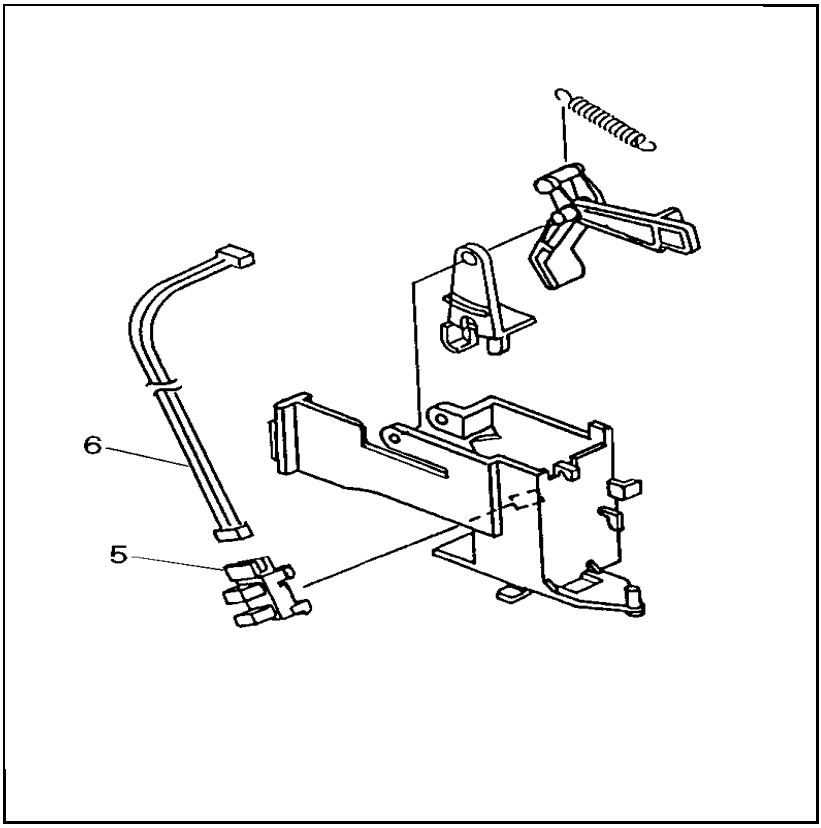

Figure 8-9 Delivery Sensor Assembly

Table 8-9 Delivery Sensor Assembly

Ref	Part #	Notes	Description
	RG5-0475-060CN		Assembly, Delivery Sensor
5	WG8-0291-000CN		Photosensor, (PS3)
6	RG5-0522-000CN RG5-0980-000CN	LJ4 LJ4+/5	Cable, Delivery Sensor

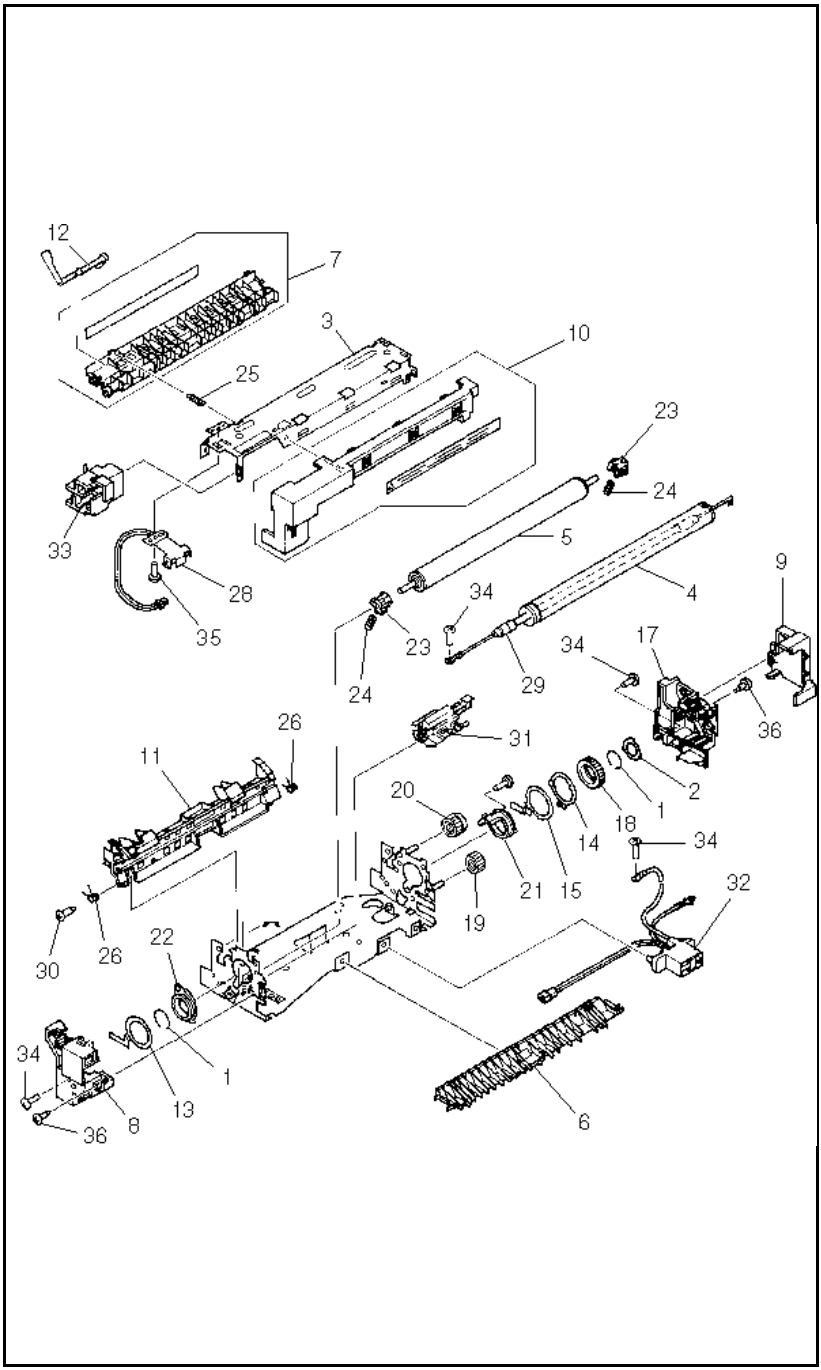

Figure 8-10 Fuser Assembly

Table 8-10 Fuser Assembly

Ref	Part #	Notes	Description
	RG5-0454-000CN RG5-0879-130CN	LJ4 LJ4+/5	Fuser Assembly 110/115V
	C2001-69003 C2037-69001	LJ4 LJ4+/5	Fuser Assembly (Exchange) 110/115V
	RG5-0455-000CN RG5-0880-130CN	LJ4 LJ4+/5	Fuser Assembly 220/240V
	C2001-69004 C2037-69002	LJ4 LJ4+/5	Fuser Assembly (Exchange) 220/240V
1	RA1-7584-000CN RB1-0253-000CN	LJ4 LJ4+/5 S	Ring, Roller (2 ea.)
2	RB1-2287-000CN	S	Washer, Grounding (LJ4 only)
3	RB1-3515-000CN		Upper Frame
4	RB1-2263-000CN RB1-3516-020CN	LJ4 LJ4+/5	Roller, Upper
5	RB1-2264-000CN RB1-3517-030CN	LJ4 LJ4+/5	Roller, Lower
6	RB1-2265-000CN RB1-3518-000CN	LJ4 LJ4+/5 S	Guide, Paper Entrance
7	RF5-0536-000CN RF5-0744-000CN	LJ4 LJ4+/5 S	Guide, Separation
8	RF5-0428-000CN RF5-0737-000CN	LJ4 LJ 4+/5	Cover, Left
9	RB1-2270-000CN	S	Cover (LJ4 only)
10	RF5-0535-000CN RF5-0738-000CN	LJ4 LJ4+/5 S	Cover, Wire
11	RB1-2272-000CN RB1-3526-000CN	LJ4 LJ4+/5 S	Guide, Lower Separation
12	RB1-2273-000CN RB1-3522-000CN	LJ4 LJ4+/5	Lever, Sensor
13	RB1-2274-000CN RB1-3528-000CN	LJ4 LJ4+	Lever, Release-Left
	RB1-3528-000CN	LJ4+/5	Washer, Grounding
14	RB1-2284-000CN	LJ4/4+	Clamp, Plate Release
15	RB1-2285-000CN RB1-3527-000CN	LJ4 LJ4+ S	Lever, Release
17	RF5-0427-000CN RF5-0736-000CN	LJ4 LJ4+/5 S	Cover, Right

Ref	Part #	Notes	Description
20	RS5-0232-000CN RS5-0393-000CN	LJ4 LJ4+/5 S	Gear, 23T
21	RS5-1063-000CN RS5-1097-020CN	LJ4 LJ4+/5	Bushing, Roller
22	RS5-1064-000CN RS5-1098-000CN	LJ4 LJ4+/5 S	Bushing, Roller
23	RS5-1065-000CN RS5-1099-000CN	LJ4 LJ4+/5 S	Bushing, Lower Roller (2)
24	RS5-2168-000CN RS5-2265-020CN	LJ4 LJ4+/5	Spring, Compression (2)
25	RS5-2180-000CN	S	Spring, Tension
26	RB1-2286-000CN	S	Spring, Guide
28	RH7-7045-000CN RH7-7054-000CN	LJ4 LJ4+/5 S	Thermistor
29	RH7-4046-000CN RH7-4054-020CN	LJ4 LJ4+/5	Heater, Halogen, 100/115V
29	RH7-4048-000CN RH7-4055-020CN	LJ4 LJ4+/5	Heater, Halogen, 220/240V
30	RS5-9055-000CN	S	Screw, Shoulder (M3)
31	RG5-0474-000CN RG5-0881-000CN	LJ4 LJ4+/5	Thermoswitch Ass'y
32	RG5-0537-000CN RG5-0977-000CN	LJ4 LJ4+/5 J743/J744	Cable, Fuser
33	RB1-2289-000CN RG5-0737-000CN	LJ4 LJ4+ S	Cover, Heater
34	XB2-8300-607CN XA9-0702-000CN	LJ4 LJ4+/5 S	Screw, M3x6 (4)
35	XB6-7300-409CN XA9-0678-000CN	LJ4 LJ4+/5 S	Screw, M3x4 Screw, M3x3
36	RF5-0716-000CN	S	Screw, Shoulder w/washer (M3) (Qty 2)

Accessory Parts

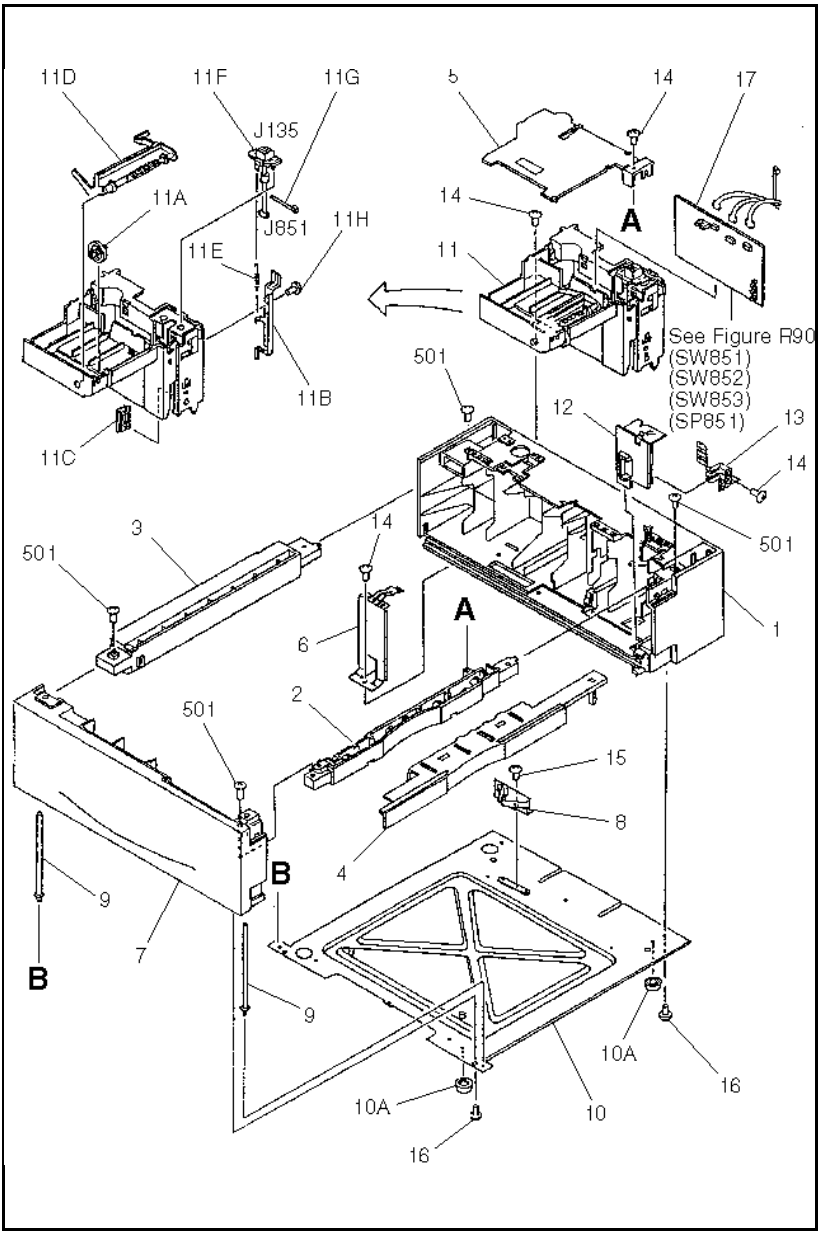

Figure 8-11 Lower Cassette Base Assembly

Table 8-11 Lower Cassette Base Assembly

Ref	Part #	Notes	Description
	C2083A	LJ4	LC Base Assembly w/non-Legal Cassette
	C2083B C2083D C3921A	LJ4 LJ/4+ LJ5	LC Base Assembly with Legal Universal Cassette Tray 3
4	RB1-2606-000CN RB1-7977-000CN	LJ4/4+ LJ5	Cover, Front
5	RB1-2628-000CN	S	Cover
6	RB1-2647-000CN	S	Plate, Grounding
8	RF5-0374-000CN	S	Click, Spring
9	RF5-0375-000CN	S	Shaft
10	RG5-0482-000CN RG5-2207-000CN	LJ4/4+ LJ5	Frame, Lower Assembly
10A	RB1-2620-000CN		Foot, Rubber (Qty 2)
11	RG5-0483-020CN		Mount, Cover Assembly
11A	RB1-2616-000CN		Roller, Guide
11D	RB1-2615-000CN	S	Arm, Sensor
11F	RG1-0542-020CN		Cable, Paper Feed
12	RG5-0487-000CN RB1-2609-000CN RB1-7978-000CN	LJ4 LJ4+ LJ5 S	Inner Cover Ass'y
14	XA9-0591-000CN		Screw (M3 x 8) (Qty 4)
17	RG5-0541-000CN RG5-1086-000CN	LJ4 LJ4+/5	Lower Cassette Drive PCA

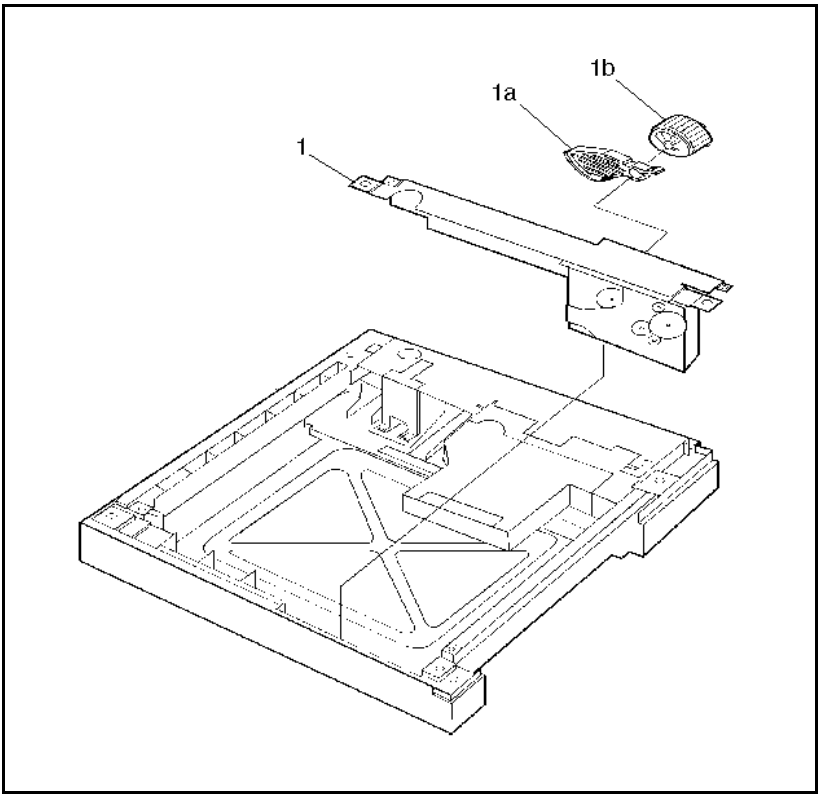

Figure 8-12 Lower Cassette Drive Assembly

Table 8-12 Lower Cassette Drive Assembly

Ref	Part #	Notes	Description
1	RG5-0481-000CN RG5-1099-000CN RG5-2209-000CN	LJ4 LJ4+ LJ5	Drive Assembly, Lower Cassette Drive Assembly, Tray 3
1a	RB1-2627-020CN		Weight
1b	RB1-2632-000CN RB1-2650-000CN RB1-7983-000CN	LJ4 LJ4+ LJ5	Roller, Pickup

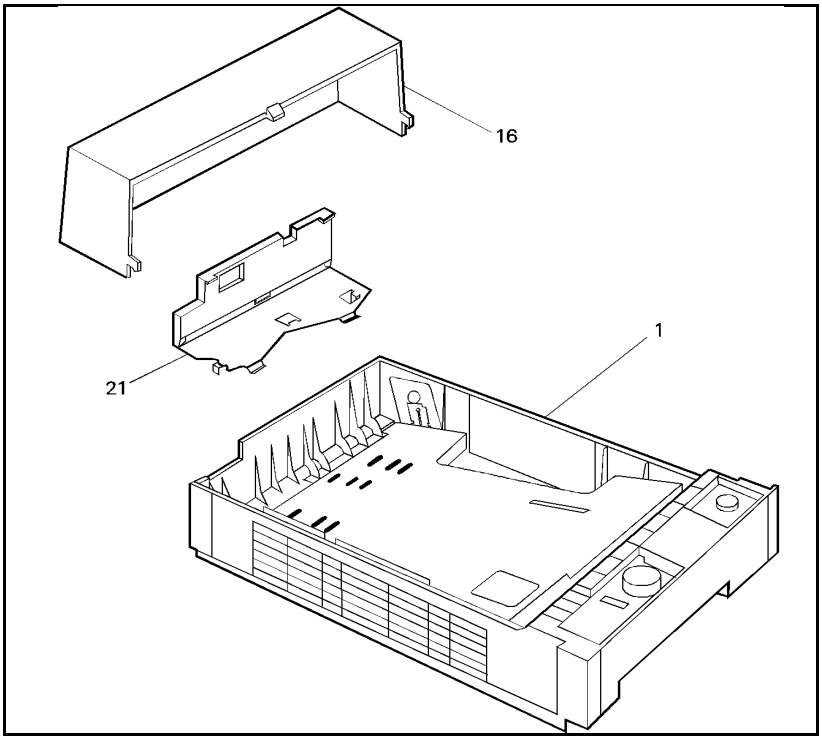

Figure 8-13 Lower Cassette Assembly

Table 8-13 Lower Cassette Assembly

Ref	Part #	Notes	Description
1	C2084A C2084C	LJ4 LJ4\4+	Universal 500 sheet Lower Cassette Tray (non-Legal)
1	C2084B C2084D C3923A	LJ4 LJ4/4+ LJ5	Universal 500 sheet Lower Cassette Tray (Legal)
16	RB1-2645-000CN RB1-8009-000CN	LJ4/4+ LJ5	Cover, Rear Cassette
21	RF5-0446-000CN RF5-1675-000CN	LJ4/4+ LJ5	Plate, End

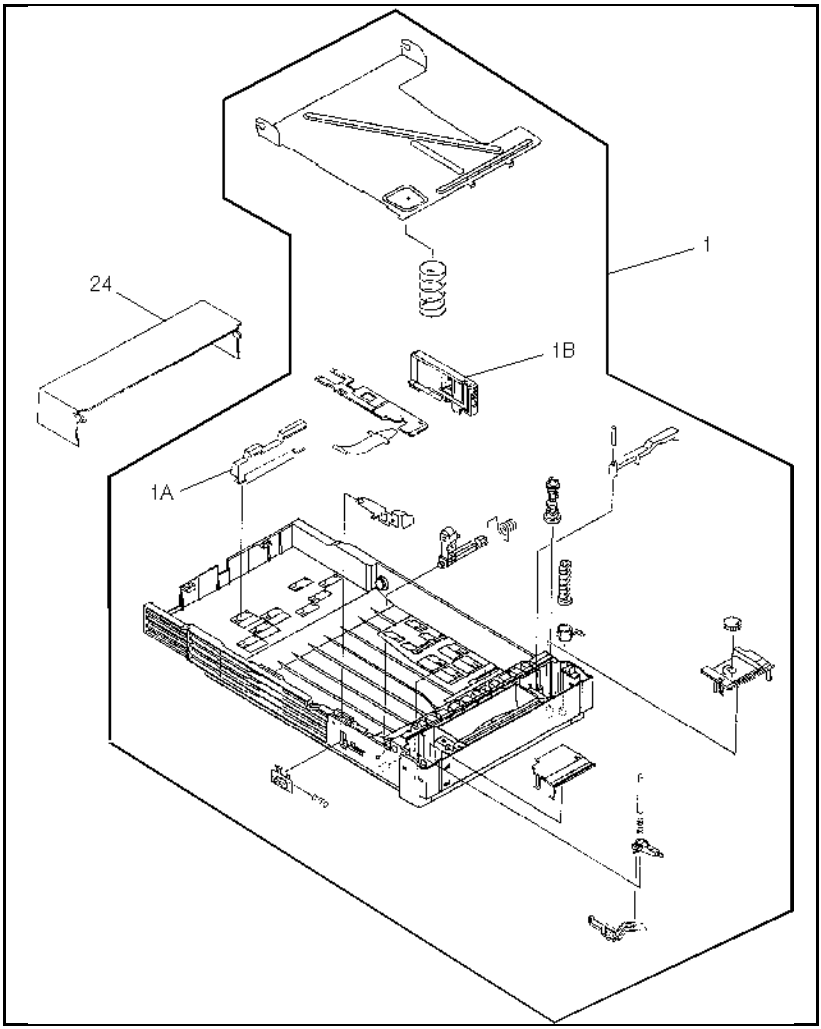

Figure 8-14 Universal Cassette

Table 8-14 Universal Cassette

Ref	Part #	Notes	Description
	C2085A C2085D C3924A	LJ4 LJ4+ LJ5	250 sheet Universal Tray (Legal, Letter, Exec, A4)
	C2085B C2085E C3925A	LJ4 LJ4+ LJ5	250 sheet PC Tray (letter)
	C2085C C2085F C3926A	LJ4 LJ4+ LJ5	250 sheet PC Tray (A4)
2	RB1-2370-020CN		Plate, Length Adjustment (part of tray assy)
21	RF5-0430-000CN		Plate (part of tray assy)
24	RB1-2391-000CN RB1-7969-000CN	LJ4/4+ LJ5	Cover, Legal

SIMM Memory

Table 8-15 Simm Modules

Part #	Notes	Size	Type
C2063A C3130A** (C3130-60001)	LJ4 LJ4+/5	1 MByte	80nS RAM
C2064A C3131A** (C3131-60001)	LJ4 LJ4+/5	2 MBytes	80nS RAM
C2065A C3132A** (C3132-60001)	LJ4 LJ4+/5	4 MBytes	80nS RAM
C2066A C3133A** (C3133-60001)	LJ4 LJ4+/5	8 MBytes	80nS RAM
C3146A**	LJ4+/5	16 MBytes	
C2080A C3129A C3918A	LJ4 LJ4+ LJ5		PostScript Level 2 Emulation SIMM
C2080-69001 C3129-69001 C3918-69001	LJ4 LJ4+ LJ5		PostScript SIMM Package, Replacement Only
C2081A N/A	LJ4 LJ4+/5		IBM/Epson Emulation SIMM

**This memory will NOT operate in the LaserJet 4

Table 8-16 Miscellaneous Parts and Accessories

Part #	Notes	Description
92298A		Toner Cartridge
J2341A J2552A (J2552-69001)	LJ4 LJ4+/5	AppleTalk MIO Interface
J2550A (J2550-69001)	LJ5	10-BaseT MIO Interface
C2082B C3927A	LJ4/4+ LJ5	Envelope Feeder (new)
C2082-69001 C3927-69001	LJ4/4+ LJ5	Envelope Feeder (exchange)
C2809A	LJ4+/5	9-25 Pin Adaptor
C2929A	LJ5	Infrared Transceiver Pod

Table 8-17 Alphanumeric Parts List

Description	Part #	Fig. #	Printer
10-BaseT MIO Interface	J2550A (J2550-69001)		5
16 Mbytes	C3146A		4+/5
250 Sheet PC Tray (A4)	C2085C	8-14	4
250 Sheet PC Tray (A4)	C2085F	8-14	4+
250 Sheet PC Tray (A4)	C3926A	8-14	5
250 Sheet PC Tray (letter)	C2085B	8-14	4
250 Sheet PC Tray (letter)	C2085E	8-14	4+
250 Sheet PC Tray (letter)	C3925A	8-14	5
250 Sheet Univ. Tray (Legal, letter, exec, A4)	C2085A	8-14	4
250 Sheet Univ. Tray (Legal, letter, exec, A4)	C2085D	8-14	4+
250 Sheet Univ. Tray (Legal, letter, exec, A4)	C3924A	8-14	5
80nS RAM, 1 Mbytes	C2063A		4
80nS RAM, 1 Mbytes	C3130A (C3130-60001)		4+/5
80nS RAM, 2 Mbytes	C2064A		4
80nS RAM, 2 Mbytes	C3131A (C3131-60001)		4+/5
80nS RAM, 4 Mbytes	C2065A		4
80nS RAM, 4 Mbytes	C3132A (C3132-60001)		4+/5
80nS RAM, 8 Mbytes	C2066A		4
80nS RAM, 8 Mbytes	C3133A (C3133-60001)		4+/5
9-25 Pin Adaptor	C2809A		4+/5
AppleTalk MIO Interface	J2341A		4
AppleTalk MIO Interface	J2552A (J2552-69001)		4+/5
Arm, Sensor	RB1-2615-000CN	8-11	4/4+/5
Assembly, Delivery Sensor	RG5-0475-000CN		4/4+/5
Assembly, MP (Tray 1) Tray Base	RG5-0467-060CN	8-6a	4/4+/5
Assembly, Sensor Holder	RG5-0466-000CN	8-6a	4/4+/5

Description	Part #	Fig. #	Printer
Base, Switch Mounting	RB1-2118-000CN	8-5	4/4+
Base, Switch Mounting	RB1-7906-000CN	8-5	5
Belt, Timing	XF9-0410-000CN	8-8	4/4+/5
Block, Connecting	RB1-2251-000CN	8-4d	4/4+/5
Brush, cleaning	RB1-2260-000CN	8-3a	4/4+
Bushing, Lower Roller (2)	RS5-1065-000CN	8-10	4
Bushing, Lower Roller (2)	RS5-1099-000CN	8-10	4+/5
Bushing, Roller	RS5-1063-000CN	8-10	4
Bushing, Roller	RS5-1064-000CN	8-10	4
Bushing, Roller	RS5-1097-020CN	8-10	4+/5
Bushing, Roller	RS5-1098-000CN	8-10	4+/5
Cable Clip	RB1-7908-000CN	8-4a	4+/5
Cable Paper Control PCA/DC Controller	RG5-0524-000CN	8-5	4/4+/5
Cable, D.C. Cont/Laser	RG5-0556-000CN	8-4a	4
Cable, D.C. Cont/Laser	RG5-0976-000CN	8-4a	4+/5
Cable, D.C. Cont/Scanner	RG5-0520-000CN	8-4a	4
Cable, D.C. Cont/Scanner	RG5-0975-000CN	8-4a	4+/5
Cable, D.C. Controller/Interconnect PCA	RG5-0521-000CN	8-4d	4
Cable, D.C. Controller/Interconnect PCA	RG5-0979-000CN	8-4d	4+/5
Cable, Delivery Sensor	RG5-0522-000CN	8-9	4
Cable, Delivery Sensor	RG5-0980-000CN	8-9	4+/5
Cable, Display Panel	RG5-0519-000CN	8-3a	4
Cable, Display Panel	RG5-0982-000CN	8-3a	4+
Cable, Env. Feeder (J604/J136)	RG5-0529-000CN	8-6a	4/4+/5
Cable, Fuser (J743/J744)	RG5-0537-000CN	8-10	4
Cable, Fuser (J743/J744)	RG5-0977-000CN	8-10	4+/5
Cable, Low Voltage, Fuser Drive	RG5-0526-000CN	8-4b	4/4+/5
Cable, Lower Feed Assembly (J603/J135)	RG5-0530-000CN	8-5	4/4Plus/5
Cable, Main Motor	RG5-0538-000CN	8-4b	4
Cable, Main Motor	RG5-0978-000CN	8-4b	4+/5

Description	Part #	Fig. #	Printer
Cable, Paper Feed	RG1-0542-020CN	8-11	4/4+/5
Clamp, Plate Release	RB1-2284-000CN	8-10	4/4+
Click, Spring	RF5-0374-000CN	8-11	4/4+/5
Click, Tray 1 Door (Qty 2)	RB1-7902-000CN	8-4a	5
Connector PCA Assembly	RG5-0515-000CN	8-4d	4/4+/5
Cover	RB1-2270-000CN	8-10	4
Cover	RB1-2345-000CN	8-5	4/4+
Cover	RB1-2628-000CN	8-11	4/4+/5
Cover, Connector	RB1-2357-000CN	8-4c	4/4+
Cover, Connector	RB1-7897-000CN	8-4c	5
Cover, Edge	RB1-2363-000CN	8-4c	4
Cover, Front	RB1-2606-000CN	8-11	4/4+
Cover, Front	RB1-7977-000CN		5
Cover, Heater	RB1-2289-000CN	8-10	4
Cover, Heater	RG5-0737-000CN	8-10	4+
Cover, High Voltage	RB1-2226-000CN	8-4d	4/4+/5
Cover, Inner	RB1-2141-000CN	8-4a	4/4+
Cover, Inner	RB1-7888-000CN	8-4a	5
Cover, Left	RF5-0428-000CN	8-10	4
Cover, Left	RF5-0737-000CN		4+/5
Cover, Legal	RB1-2391-000CN	8-14	4/4+
Cover, Legal	RB1-7969-000CN	8-14	5
Cover, Option Board	RB1-2366-000CN	8-4c	4/4+/5
Cover, Rear Cassette	RB1-2645-000CN	8-13	4/4+
Cover, Rear Cassette	RB1-8009-000CN	8-13	5
Cover, Right	RF5-0427-000CN	8-10	4
Cover, Right	RF5-0736-000CN	8-10	4+/5
Cover, SIMM Board	RB1-2343-000CN	8-4c	4
Cover, SIMM Board	RF5-0739-000CN	8-4c	4+
Cover, SIMM Board	RF5-1654-000CN	8-4c	5
Cover, Upper	RF5-0360-000CN	8-3a	4

Description	Part #	Fig. #	Printer
Cover, Upper	RF5-0732-000CN	8-3a	4+
Cover, Upper	RF5-1643-000CN	8-3b	5
Cover, Wire	RF5-0535-000CN	8-10	4
Cover, Wire	RF5-0738-000CN	8-10	4+/5
DC Controller PCA	C2001-69002	8-1b	4
DC Controller PCA	C2001-69002	8-4b	4
DC Controller PCA	C2037-69004	8-1b	4+/5
DC Controller PCA	C2037-69004	8-4b	4+/5
DC Controller PCA	RG5-0511-000CN	8-1b	4
DC Controller PCA	RG5-0511-000CN	8-4b	4
DC Controller PCA	RG5-0966-000CN	8-1b	4+/5
DC Controller PCA	RG5-0966-030CN	8-4b	4+/5
Display Assembly (English)	C2001-69010	8-3a	4
Display Assembly (English)	C2037-69005	8-3a	4+
Display Assembly (English)	RG5-0533-000CN	8-3a	4/4+
Display Assembly (English)	RG5-1077-000CN	8-3a	4+
Display Assembly (w/o overlay)	RG5-0478-000CN	8-3a	4
Display Assembly (w/o overlay)	RG5-2238-000CN	8-3a	4+
Display Assembly (w/o overlay)	RG5-2238-000CN	8-3b	5
Display Assembly w/o overlay	C2001-69010	8-3	4
Display Assembly w/o overlay	C2037-69005	8-3	4+
Display Assembly w/o overlay	RG5-0478-000CN	8-3	4
Display Assembly w/o overlay	RG5-2238-000CN	8-3	4+
Display Cover	RB1-7887-000CN	8-3b	5
Drive Gear Assembly	RG5-0457-000CN	8-4b	4
Drive Gear Assembly	RG5-0876-050CN	8-4b	4+/5
Drive Gear Cover	RB1-2318-000CN	8-4b	4
Drive Gear Cover	RB1-3481-020CN	8-4b	4+/5
Drive, Assembly, Lower Cassette	RG5-0481-000CN	8-12	4
Drive, Assembly, Lower Cassette	RG5-1099-000CN	8-12	4+
Drive, Assembly, Lower Cassette	RG5-2209-000CN	8-12	5

Description	Part #	Fig. #	Printer
Envelope Feeded (exchange)	C2082-69001		4/4+
Envelope Feeded (exchange)	C3927-69001		5
Envelope Feeder (new)	C2082B		4/4+
Envelope Feeder (new)	C3827A		5
Exhaust Duct	RB1-2112-000CN	8-4b	4
Exhaust Duct	RB1-3544-000CN	8-4b	4+/5
Exhaust Duct Cover	RB1-2113-000CN	8-4b	4
Exhaust Duct Cover	RF5-0748-000CN	8-4b	4+/5
Exhaust Fan	RH7-1143-000CN	8-4b	4
Exhaust Fan	RH7-1177-000CN	8-4b	4+
Exhaust Fan	RH7-1178-000CN	8-4b	5
Exhaust Fan Cover	RB1-2350-000CN	8-4b	4+
Exhaust Fan Cover	RB1-3547-000CN	8-4b	4+
Font Door Cover	RG5-0459-000CN	8-2	4/4+
Foot (Qty 5)	RB1-2114-000CN	8-4a	4/4+/5
Foot, Rubber (2)	RB1-2620-000CN	8-11	4/4+/5
Formatter PCA	C2002-67901	8-1b	4
Formatter PCA	C2002-67901	8-4c	4
Formatter PCA	C2002-69001	8-1b	4
Formatter PCA	C2038-39004	8-4c	4+
Formatter PCA	C2038-60004	8-1b	4+/5
Formatter PCA	C2038-60004	8-4c	4+
Formatter PCA	C2038-69004	8-1b	4+/5
Formatter PCA	C2202-6901	8-4c	4
Formatter PCA	C3919-67901	8-4c	5
Formatter PCA	C3919-69001	8-4c	5
Frame, Lower Assembly	RG5-0482-000CN	8-11	4/4+
Frame, Lower Assembly	RG5-2207-000CN		5
Front Door Latch	XZ9-0340-000CN	8-4a	4/4+/5
Front Door Latch	XZ9-0379-000CN	8-4a	4/4+
Fuser Assembly (100/115V)	C2001-69003		4

Description	Part #	Fig. #	Printer
Fuser Assembly (100/115V)	C2037-69001		4+/5
Fuser Assembly (220/240V)	C2001-69004		4
Fuser Assembly (220/240V)	C2037-69002		4+/5
Fuser Assembly (220/240V)	RG5-0455-000CN		4
Fuser Assembly (220/240V)	RG5-0880-130CN		4+/5
Fusing Assembly (100/110V)	C2001-69003	8-10	4
Fusing Assembly (100/110V)	C2037-69001	8-10	4+/5
Fusing Assembly (100/110V)	RG5-0454-000CN	8-10	4
Fusing Assembly (100/110V)	RG5-0879-000CN	8-10	4+/5
Fusing Assembly (220/240V)	C2001-69004	8-10	4
Fusing Assembly (220/240V)	C2037-69002	8-10	4+/5
Fusing Assembly (220/240V)	RG5-0455-000CN	8-10	4
Fusing Assembly (220/240V)	RG5-0880-000CN	8-10	4+/5
Gear, 23T	RS5-0232-000CN	8-10	4
Gear, 23T	RS5-0393-000CN	8-10	4+/5
Gear, 34T	RS5-0230-000CN	8-10	4
Gear, 42T	RS5-0388-000CN	8-10	4+/5
Guide, Cartridge	RB1-2100-000CN	8-4a	4/4+
Guide, Cartridge	RB1-2101-020CN	8-4a	4/4+/5
Guide, Cartridge	RB1-5730-000CN	8-4a	5
Guide, Cassette	RB1-2107-000CN	8-4a	4/4+
Guide, Cassette	RB1-7913-000CN	8-4a	5
Guide, Cassette	RF5-0363-000CN	8-4a	4
Guide, Cassette	RF5-1079-000CN	8-4a	4+
Guide, Cassette	RF5-1657-000CN	8-4a	5
Guide, Click, Left	RB1-7903-000CN	8-4a	5
Guide, Click, Right	RB1-7923-000CN	8-4a	5
Guide, Feeder	RB1-2236-000CN	8-4d	4/4+/5
Guide, Font Cartridge	RB1-2337-000CN	8-4c	4
Guide, Font Cartridge	RB1-3497-000CN	8-4c	4+/5
Guide, I/O Option	RB1-2341-000CN	8-4c	4

Description	Part #	Fig. #	Printer
Guide, Lower Separation	RB1-2272-000CN	8-10	4
Guide, Lower Separation	RB1-3526-000CN	8-10	4+/5
Guide, Paper Entrance	RB1-2265-000CN	8-10	4
Guide, Paper Entrance	RB1-3518-000CN	8-10	4+/5
Guide, Separation	RF5-0536-000CN	8-10	4
Guide, Separation	RF5-0744-000CN	8-10	4+/5
Heater, Halogen (100/115V)	RH7-4046-000CN	8-10	4
Heater, Halogen (100/115V)	RH7-4054-020CN	8-10	4+/5
Heater, Halogen (220/240V)	RH7-4048-000CN	8-10	4
Heater, Halogen (220/240V)	RH7-4055-020CN	8-10	4+/5
Hex Head Screw	XA9-0623-000CN	8-4d	4/4+/5
High Voltage PCA	C2001-69009	8-4d	4
High Voltage PCA	C2037-69009	8-4d	4+/5
High Voltage PCA	RG5-0513-000CN	8-4d	4
High Voltage PCA	RG5-0969-040CN	8-4d	4+/5
Hinge Stop	RB1-7894-000CN	8-3b	5
Hinge, Arm	RB1-2329-000CN	8-3a	4
Hinge, Arm (2 ea.)	RB1-3473-000CN	8-3a	4+
Hinge, Bracket	RB1-2323-000CN	8-3a	4/4+
Hinge, Bracket	RB1-2364-000CN	8-3a	4/4+
Hinge, Pin (2 ea.)	RB1-2324-000CN	8-3a	4/4+
Holder, Guide Roller	RB1-2181-000CN	8-6a	4/4+/5
Holder, Latch	RB1-2125-000CN	8-4a	4
Holder, Latch	RB1-3560-000CN	8-4a	4+
Holder, Paper, Front	RF5-0369-040CN	8-4d	4/4+/5
Holder, Paper, Rear	RB1-2259-040CN	8-4d	4/4+/5
Holder, Roller, 4 ea.	RF5-0425-040CN	8-8	4/4+/5
Holding Plate	RB1-2353-000CN	8-4a	4/4+
Holding Plate	RF5-1648-000CN		5
IBM/Epson Emulation SIMM	C2081A		4
Infrared Transceiver Pod	C2929A		5

Description	Part #	Fig. #	Printer
Inner Cover Assembly	RB1-2609-000CN	8-11	4+
Inner Cover Assembly	RB1-7978-000CN		5
Inner Cover Assembly	RG5-0487-000CN	8-11	4
Label	RS5-8219-000CN	8-4c	4/4+/5
Label 110/115V	RS5-8205-000CN	8-2	4/4+/5
Label 220/240V	RS5-8916-000CN	8-2	4/4+/5
Laser/Scanner Assembly	C2001-69006	8-1b	4
Laser/Scanner Assembly	C2001-69006	8-4a	4
Laser/Scanner Assembly	C2037-69008	8-1b	4+/5
Laser/Scanner Assembly	C2037-69008	8-4a	4+
Laser/Scanner Assembly	RG5-0449-000CN	8-1b	4
Laser/Scanner Assembly	RG5-0449-000CN	8-4a	4
Laser/Scanner Assembly	RG5-0903-070CN	8-1b	4+/5
Laser/Scanner Assembly	RG5-0903-070CN	8-4a	4+/5
LC Base Assembly w/Legal	C3921A		5
LC Base Assembly w/Legal Univ. cassette	C2083B		4
LC Base Assembly w/Legal Univ. cassette	C2083D		4/4+
LC Base Assembly w/non-Legal cassette	C2083A		4
Left Cover	RB1-2347-000CN	8-2	4
Left Cover	RB1-3471-000CN	8-2	4+
Left Cover	RB1-7881-000CN	8-2	5
Lever, Release	RB1-2285-000CN	8-10	4
Lever, Release	RB1-3527-000CN	8-10	4+
Lever, Release-Left	RB1-2274-000CN	8-10	4
Lever, Release-Left	RB1-3523-000CN	8-10	4+/5
Lever, Sensor	RB1-2273-000CN	8-10	4
Lever, Sensor	RB1-3522-000CN	8-10	4+/5
Lever, Switch	RB1-2138-000CN	8-6a	4/4+/5
Lock (Nut)	XA9-0400-000CN	8-4c	4
Lock (Nut)	XA9-0704-000CN	8-4c	4+/5

Description	Part #	Fig. #	Printer
Lower Cassette Tray, Univ. 500 sheet	C2084A	8-13	4
Lower Cassette Tray, Univ. 500 sheet	C2084C	8-13	4+/5
Lower Cassette Tray, Univ. 500 sheet Legal	C2084B	8-13	4
Lower Cassette Tray, Univ. 500 sheet Legal	C2084D	8-13	4+/5
Lower Cassette Tray, Univ. 500 sheet Legal	C3923A	8-13	5
Main Motor	RH7-1151-000CN	8-4b	4
Main Motor	RH7-1169-000CN	8-4b	4+/5
Main Switch Assembly	RB1-2119-00CN	8-5	4
Main Switch Assembly	RB1-7907-000CN	8-5	4+/5
Motor, Main Drive	RH7-1151-000CN	8-4b	4
Motor, Main Drive	RH7-1169-000CN	8-4b	4+/5
Motor, Paper Pickup	RH7-1136-000CN	8-6b	4
Motor, Paper Pickup	RH7-1197-000CN	8-6b	4+
Mount, Cover Assembly	RG5-0483-020CN	8-11	4/4+/5
Mount, DC Controller	RF5-0470-000CN	8-4b	4
Mount, DC Controller	RF5-0743-000CN	8-4b	4+
Mount, DC Controller	RF5-1653-000CN	8-4b	5
Mount, Tray 1 Door	RB1-7901-000CN	8-4a	5
MP Door	RB1-2351-000CN	8-2	4
MP Door	RB1-3559-000CN	8-2	4+
MP Door	RB1-7886-000CN	8-2	5
MP Tray (Tray 1)	RG5-0472-000CN	8-7	4
MP Tray (Tray 1)	RG5-0888-000CN	8-7	4+
MP Tray (Tray 1)	RG5-2199-000CN	8-7	5
MP Tray Extender	RB1-2143-000CN	8-2	4
MP Tray Extender	RB1-3558-000CN	8-2	4+
MP Tray Extender	RB1-7885-000CN	8-2	5
Multi-Purpose Tray Assembly	RG5-0472-000CN	8-7	4
Multi-Purpose Tray Assembly	RG5-0888-000CN	8-7	4+
Multi-Purpose Tray Assembly	RG5-2199-000CN	8-7	5

Description	Part #	Fig. #	Printer
Overlay (Czechoslovakian)	C3916-40023	8-3b	5
Overlay (Danish)	C2001-40008	8-3a	4
Overlay (Danish)	C3916-40011	8-3b	5
Overlay (Dutch)	C2001-40010	8-3a	4
Overlay (Dutch)	C3916-40013	8-3b	5
Overlay (English)	C2001-40001	8-3a	4
Overlay (English)	C3916-40005	8-3b	5
Overlay (English)	RB1-2359-000CN	8-3a	4
Overlay (English)	RB1-3476-000CN	8-3a	4/4+
Overlay (English)	RB1-7884-000CN	8-3b	5
Overlay (European English)	C2037-40014	8-3a	4/4+
Overlay (Finnish)	C2001-40009	8-3a	4
Overlay (Finnish)	C3916-40014	8-3b	5
Overlay (French)	C2001-40002	8-3a	4
Overlay (French)	C3916-40006	8-3b	5
Overlay (German)	C2001-40003	8-3a	4
Overlay (German))	C3916-40008	8-3b	5
Overlay (Hungarian)	C3916-40022	8-3b	5
Overlay (Italian)	C2001-40004	8-3a	4
Overlay (Italian)	C3916-40007	8-3b	5
Overlay (Japanese)	C3916-40021	8-3b	5
Overlay (Korean)	C3916-40018	8-3b	5
Overlay (Norwegian)	C2001-40006	8-3a	4
Overlay (Norwegian)	C3916-40010	8-3b	5
Overlay (Polish)	C2001-40011	8-3a	4
Overlay (Polish)	C3916-40015	8-3b	5
Overlay (Portuguese)	C2001-40013	8-3a	4
Overlay (Portuguese)	C3916-40012	8-3b	5
Overlay (Russian)	C3916-40026	8-3b	5
Overlay (Simplified Chinese)	C3916-40019	8-3b	5
Overlay (Spanish)	C2001-40005	8-3a	4

Description	Part #	Fig. #	Printer
Overlay (Spanish)	C3916-40009	8-3b	5
Overlay (Swedish)	C2001-40007	8-3a	4
Overlay (Swedish)	C3916-40016	8-3b	5
Overlay (Thai)	C3916-40025	8-3b	5
Overlay (Traditional Chinese)	C3916-40017	8-3b	5
Overlay (Turkish)	C2001-40012	8-3a	4
Overlay (Turkish)	C3916-40020	8-3b	5
Overlay, Danish	C2037-40008	8-3a	4+
Overlay, Dutch	C2037-40010	8-3a	4+
Overlay, English	C2037-40001	8-3a	4+
Overlay, European English	C2037-40014	8-3a	4
Overlay, Finnish	C2037-40009	8-3a	4+
Overlay, French	C2037-40002	8-3a	4+
Overlay, German	C2037-40003	8-3a	4+
Overlay, Italian	C2037-40004	8-3a	4+
Overlay, Norwegian	C2037-40006	8-3a	4+
Overlay, Polish	C2037-40011	8-3a	4+
Overlay, Portugese	C2037-40013	8-3a	4
Overlay, Spanish	C2037-40005	8-3a	4+
Overlay, Swedish	C2037-40007	8-3a	4+
Overlay, Turkish	C2037-40012	8-3a	4+
Pad, Separation	RF5-0343-000CN	8-6b	4/4+/5
Panel, I/O	RF5-0355-000CN	8-4c	4/4+/5
Paper Control PCA	RG5-0512-000CN	8-1	4/4+/5
Paper Control PCA	RG5-0512-070CN	8-6a	4/4+/5
Paper Feed Assembly	C2001-69005	8-6	4
Paper Feed Assembly	C2001-69005		4
Paper Feed Assembly	C2037-69003	8-6	4+
Paper Feed Assembly	C2037-69003		4+
Paper Feed Assembly	C3916-69005	8-6	5
Paper Feed Assembly	C3916-69005		5

Description	Part #	Fig. #	Printer
Paper Feed Assembly	RG5-0451-000CN,	4	
Paper Feed Assembly	RG5-0451-000CN	8-6	4
Paper Feed Assembly	RG5-0877-000CN	8-6	4+
Paper Feed Assembly	RG5-0877-000CN		4+
Paper Feed Assembly	RG5-2195-000CN	8-6	5
Paper Feed Assembly	RG5-2195-000CN		5
Paper Output Assembly	RG5-0456-000CN	8-8	4
Paper Output Assembly	RG5-0456-000CN		4
Paper Output Assembly	RG5-0886-000CN	8-8	4+
Paper Output Assembly	RG5-0886-000CN		4+
Paper Output Assembly	RG5-2189-000CN	8-8	5
Paper Output Assembly	RG5-2189-000CN		5
Paper Output Sensor Assembly	RG5-0475-060CN	8-1	4/4+
Paper Sensor Flag	RB1-2133-000CN		4/4+/5
Paper Sensor Leaf Spring	RB1-2139-030CN		4/4+/5
PC (Tray 1) Pickup Solenoid (SL 2)	RH7-5074-000CN	8-6b	4
PC (Tray 1) Pickup Solenoid (SL 2)	RH7-5075-000CN	8-6b	4+/5
PC (Tray 2) Pickup Solenoid (SL 1)	RH7-5070-000CN	8-6a	4
PC (Tray 2) Pickup Solenoid (SL 1)	RH7-5071-000CN	8-6a	4+/5
PC Tray (A4)	C2085C	8-14	4
PC Tray (A4)	C2085F	8-14	4+
PC Tray (A4)	C3926A	8-14	5
PC Tray (ltr) (Tray 2)	C2085B	8-14	4
PC Tray (ltr) (Tray 2)	C2085E	8-14	4+
PC Tray (ltr) (Tray 2)	C3925A	8-14	5
PCA, Sensor (PS4, PS5)	RG5-0514-000CN	8-6b	4/4+/5
Photo-Sensor (PS1, PS2) (Qty. 2)	WG8-0291-000CN	8-6a	4/4+/5
Photosensor (PS3)	WG8-0291-000CN	8-9	4/4+/5
Pin, Sensor Holder	RB1-2179-000CN	8-6a	4/4+/5
Plate, End	RF5-0446-000CN	8-13	4/4+
Plate, End	RF5-1675-000CN	8-13	5
Plate, Grounding	RB1-2106-000CN	8-4a	4/4+/5

Description	Part #	Fig. #	Printer
Plate, Grounding	RB1-2647-000CN	8-11	4/4+/5
Plate, Length Adjustment	RB1-2370-020CN	8-14	4/4+/5
Plate, PCA Holding	RB1-2365-000CN	8-4c	4
Plate, PCA Holding	RB1-3493-000CN	8-4c	4+/5
Plate, Pressure	RB1-7917-000CN	8-4a	5
Plate, Pressure	RB1-7918-000CN	8-4a	5
Plate, Pressure	RF5-0365-000CN	8-4a	4/4+
Plate, Pressure	RF5-0366-000CN	8-4a	4/4+
Plate, Reinforcement	RB1-3494-000CN	8-4c	4+
Plate, Reinforcement	RB1-7892-000CN	8-4c	5
Plate, Shield	RB1-2338-000CN	8-4c	4
Plate, Shield	RF5-0471-000CN	8-4c	4
Plate, Shield	RF5-0746-000CN	8-4c	4+
Plate, Shield	RF5-1647-000CN	8-4c	5
Plate, Side Adjust	RF5-0430-000CN		4/4+/5
PostScript Level 2 Emulation SIMM	C2080A		4
PostScript Level 2 Emulation SIMM	C3129A		4+
PostScript Level 2 Emulation SIMM	C3918A		5
PostScript SIMM Package	C3129-69001		4
PostScript SIMM Package	C3918-69001		4+
PostScript SIMM, Replacement Only	C2080-69001		4
Power Assembly (100/115V)	C2001-69007	8-4b	4
Power Assembly (100/115V)	C2037-69006	8-4b	4+
Power Assembly (100/115V)	RG5-0531-000CN	8-4b	4
Power Assembly (100/115V)	RG5-2499-000CN	8-4b	4+
Power Assembly (220/240V)	C2001-69008	8-4b	4
Power Assembly (220/240V)	C2037-69007	8-4b	4+
Power Assembly (220/240V)	RG5-0553-000CN	8-4b	4
Power Assembly (220/240V)	RG5-2500-000CN	8-4b	4+
Power Supply (100/110V)	C2001-69007	8-1a	4
Power Supply (100/110V)	C2037-69006	8-1a	4+

Description	Part #	Fig. #	Printer
Power Supply (100/110V)	RG5-0531-000CN	8-1a	4+/5
Power Supply (100/110V)	RG5-0531-000CN	8-1a	4
Power Supply (100/110V)	RG5-2499-000CN	8-1a	4+
Power Supply (100/110V)	RG6-2499-000CN	8-1a	4+/5
Power Supply (220/240V)	C2001-69008	8-1a	4
Power Supply (220/240V)	C2037-69007	8-1a	4+
Power Supply (220/240V)	RG5-0553-000CN	8-1a	4
Power Supply (220/240V)	RG5-2500-000CN	8-1a	4+
Rear Cover Assembly	RG1-3508-000CN		4+
Rear Cover Assembly	RG1-3570-000CN		5
Rear Door Assembly	RF5-0533-000CN	8-2	4
Rear Door Assembly	RF5-0733-000CN	8-2	4+
Rear Door Assembly	RF5-1645-000CN	8-2	5
Rear Door Latch	RB1-2335-000CN	8-2	4/4+
Rear Door Latch	RB1-3475-000CN	8-2	4+/5
Rear Door Latch	RB1-7890-000CN	8-2	5
Rear Door Spring	RS5-2219-000CN	8-2	4/4+
Rear Door Spring	RS5-2571-000CN	8-2	5
Rear Door Support Strap	RB1-2354-000CN	8-2	4
Rear Door Support Strap	RS5-2219-000CN	8-2	4+/5
Right Cover	RB1-2346-000CN	8-2	4
Right Cover	RB1-3470-000CN	8-2	4+
Right Cover	RF5-1644-000CN	8-2	5
Right Front Cover	RB1-7889-000CN	8-2	5
Ring, Roller (2 ea.)	FB1-0253-000CN	8-10	4+/5
Ring, Roller (2 ea.)	RA1-7584-000CN	8-10	4
Rod	RB1-2352-000CN	8-4b	4/4+
Rod	RB1-7896-000CN	8-4b	5
Roller, Guide	RB1-2182-000CN	8-6a	4/4+/5
Roller, Guide	RB1-2616-000CN	8-11	4/4+/5
Roller, Guides (6)	RB1-2253-000CN	8-4d	4/4+/5
Roller, Lower	RB1-2264-000CN	8-10	4

Description	Part #	Fig. #	Printer
Roller, Lower	RB1-3517-030CN	8-10	4+/5
Roller, Lower Delivery	RF5-0438-000CN	8-8	4
Roller, Lower Delivery	RF5-1077-030CN	8-8	4+/5
Roller, MP Tray Pickup	RB1-2127-000CN	8-6b	4/4+
Roller, MP Tray Pickup	RB1-2205-000CN	8-6b	5
Roller, Pickup	RB1-2126-000CN	8-6b	4
Roller, Pickup	RB1-2632-000CN	8-12	4
Roller, Pickup	RB1-2650-000CN	8-12	4+
Roller, Pickup	RB1-3477-000CN	8-6b	4+
Roller, Pickup	RB1-7911-000CN	8-6b	5
Roller, Pickup	RB1-7983-000CN	8-12	5
Roller, Transfer	RF5-0349-000CN	8-4d	4/4+/5
Roller, Upper	RB1-2263-000CN	8-10	4
Roller, Upper	RB1-3516-020CN	8-10	4+/5
Roller, Upper Delivery	RF5-0534-000CN	8-8	4/4+
Roller, Upper Delivery	RF5-1076-020CN		5
Rollers, Delivery, 4 ea.	RB1-2299-030CN	8-8	4/4+/5
Screw w/Washer, 4 ea.	XA9-0585-000CN	8-4b	4/4+/5
Screw w/Washer, M3x29.5	XA9-0668-000CN	8-4b	4+/5
Screw with Washer (M3x8) (4)	XA9-0591-000CN	8-3a	4/4+
Screw, 5mm hex head	XA9-0574-000CN	8-4c	4/4+/5
Screw, M3x3	XA9-0678-000CN	8-10	4+/5
Screw, M3x4	XB6-7300-409CN	8-10	4
Screw, M3x4	XB6-7300-409CN	8-4c	4
Screw, M3x6	XA9-0617-000CN	8-4c	4
Screw, M3x6	XA9-0670-000CN	8-4c	4+/5
Screw, M3x6	XA9-0702-000CN	8-10	4+/5
Screw, M3x6	XB2-8300-607CN	8-10	4
Screw, M3x8	XA9-0591-000CN	8-11	4/4+/5
Screw, Shoulder (M3)	RS5-9055-000CN	8-10	4/4+/5
Screw, Shoulder w/Washer (M3)		8-10	4+/5
Screw, Shoulder w/Washer (M3)	RF5-0716-000CN	8-10	4/4+/5

Description	Part #	Fig. #	Printer
Screw, w/Spring Washer	XA9-0584-000CN	8-4c	4
Screw, w/Spring Washer	XA9-0670-000CN	8-4c	4+/5
Screw, w/Washer, 2 ea	XA9-0267-000CN	8-4b	4+/5
Screw, w/Washer, 4 ea.	FA9-1449-000CN	8-4b	4
Sensor PCA	RG5-0514-000CN	8-6b	4/4+/5
Shaft	RF5-0375-000CN	8-11	4/4+/5
Sheet	RB1-2312-000CN	8-4c	4/4+/5
Sheet	RB1-2313-000CN	8-4c	4/4+/5
Shield, Font Cover	RB1-2366-000CN	8-4c	4
Shield, Font Cover	RB1-3496-000CN	8-4c	4+
Shield, Font Cover	RB1-7898-000CN	8-4c	5
Shutter Spring, Torsion	RB1-2122-000CN	8-4a	4/4+/5
Shutter, Arm	RB1-2111-030CN	8-4a	4/4+/5
Shutter, Laser	RB1-2080-000CN	8-4a	4/4+/5
Spring, Compression	RS5-2168-000CN	8-10	4
Spring, Compression	RS5-2218-000CN	8-4a	4/4+/5
Spring, Compression	RS5-2265-020CN	8-10	4+/5
Spring, Compression, 4 ea.	RS5-2185-000CN	8-8	4
Spring, Compression, 4 ea.	RS5-2267-000CN	8-8	4+/5
Spring, Guide	RB1-2286-000CN	8-10	4/4+/5
Spring, Leaf	RB1-2330-000CN	8-3a	4/4+
Spring, Leaf	RB1-7893-000CN	8-3b	5
Spring, Left Cartridge Guide	RB1-5731-000CN	8-4a	5
Spring, Roller, 4 ea.	RB1-2302-000CN	8-8	4/4+/5
Spring, Switch	RB1-2358-000CN	8-4a	4/4+
Spring, Switch	RB1-2966-000CN	8-4a	5
Spring, Tension	RS5-2180-000CN	8-10	4/4+/5
Spring, Tension (Qty. 2)	RS5-2170-000CN	8-4a	4/4+/5
Spring, Torsion	RB1-5732-000CN	8-4a	4/4+/5
Static Eliminator	RB1-2237-020CN	8-4a	4/4+/5
Stop, Hinge	RB1-2314-000CN	8-3a	4/4+

Description	Part #	Fig. #	Printer
Support, Cartridge	RB1-2105-030CN	8-4a	4/4+/5
Switch	RB1-2119-000CN	8-5	4/4+
Switch	RB1-7907-000CN	8-5	5
Thermistor	RH7-7045-000CN	8-10	4
Thermistor	RH7-7054-000CN	8-10	4/4+
Thermoswitch Assembly	RG5-0474-000CN	8-10	4
Thermoswitch Assembly	RG5-0881-000CN	8-10	4+/5
Toner Cartridge	92298A		
Tool, hook	RB1-7895-000CN	8-3b	5
Top Cover Door	RB1-2322-000CN	8-3a	4
Top Cover Door	RB1-3474-000CN	8-3a	4+
Top Cover Door	RB1-7883-000CN	8-3b	5
Transfer Block Assembly	RG5-0468-000CN	8-4d	4/4+
Transfer Block Assembly	RG5-2192-000CN	8-4d	5
Transfer Guide Assembly	RG5-0469-000CN	8-4a	4/4+/5
Transfer Guide Assembly	RG5-0469-020CN	8-1a	4/4+/5
Upper Cover Assembly	RG5-0458-000CN	8-3a	4
Upper Cover Assembly	RG5-0872-000CN	8-3a	LJ4+
Upper Cover Assembly	RG5-2186-000CN	8-3b	5
Upper Frame	RB1-3515-000CN	8-10	4/4+/5
Upper Guide, Delivery	RF5-0532-000CN	8-8	4/4+
Upper Guide, Delivery	RF5-0647-000CN	8-8	5
Washer, Grounding	RB1-2287-000CN	8-10	4
Washer, Grounding	RB1-3528-000CN		4+/5
Weight	RB1-2627-020CN	8-12	4/4+/5

A

Duplexer

This Appendix contains a functional overview of the Optional Duplexer, as well as step-by-step Installation and Removal & Replacement instructions.

The Optional Duplexer, when used with the LaserJet 4 Plus/5 printer, allows printing on both sides of the paper. It may be used with the optional 500-sheet Lower Cassette or with the printer alone.

Note The Duplexer works only with the LaserJet 4 Plus or LaserJet 5 printer. It is not supported on the LaserJet 4.

Functional Overview

The Duplexer consists of two major assemblies; the Switchback Assembly that is attached to the back of the printer and the Holding Tray located directly under the printer (see Figure A-1.)

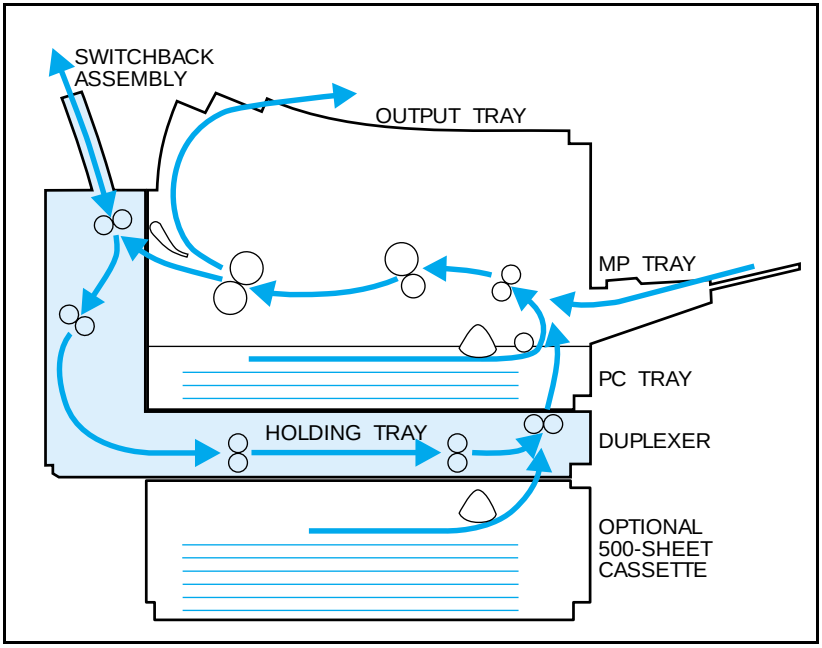

Figure A-1 Duplexer Paper Path

Duplex Printing

Note The **bold text** and numbers in the following description refer to parts shown in Figure A-2.

When the printer is operating in duplex mode, the print images are printed in reverse order. Page two prints on the first pass of the paper through the printer and page one prints on the second pass through.

Switchback Assembly

To print the first pass, the paper goes through the printer paper path, where it is developed and fused. As the paper exits the fuser, the **Switchback Solenoid (1)** is activated. The Switchback Solenoid moves the **Switchback Input Paper Guide (2)**, routing the paper into the Switchback mechanism. The **Switchback Stepper Motor (3)** then pulls the paper out of the printer into the Switchback Assembly. (The paper can be seen coming out of the top of the Switchback Assembly.)

As the paper moves through the Switchback Assembly, the spring loaded switchback **Paper Reversing Guide (4)** and its attached flag is moved, activating the **Switchback Paper Sensor (5)**. The paper continues to move out of the Switchback Assembly until it passes the switchback Paper Reversing Guide. The switchback Paper Reversing Guide returns to its original position when the paper passes it. The flag attached to the guide switches the electrical state of the switchback paper sensor. This signals the **Duplex Control PCA (6)** that the paper has advanced far enough to reverse direction. The Duplex Control PCA then reverses the direction of the Switchback Stepper Motor, causing the paper to reverse direction and move into the duplex **Holding Tray (7)**.

Holding Tray

The Holding Tray, as the name implies, holds the paper which has been printed on one side while the print engine prepares to print the second side. The major components of the Holding Tray are the **Holding Tray Input Stepper Motor (8)**, the **Holding Tray Output Stepper Motor (9)**, and the **Holding Tray Paper Detect Sensor (10)**.

As the paper moves from the Switchback Assembly, it is picked up by the rollers that are operated by the Holding Tray Input Stepper Motor. The Input Stepper Motor moves the paper into the Holding Tray. When the paper moves the flag that controls the Holding Tray Paper Sensor, the Duplex Control PCA turns off the Input Stepper Motor, and the paper stops moving.

The paper remains in the Holding Tray until the print engine signals the Duplex Control PCA that it is ready to print the second side. The Duplex Control PCA will then turn on both the Holding Tray Input Stepper Motor and the Holding Tray Output Stepper Motor. These motors will move the paper out of the Holding Tray into the paper input of the print engine. The paper is then printed on the second side. When the paper exits the Fuser Assembly, the Switchback Input Guide routes the paper directly to the printer's output tray.

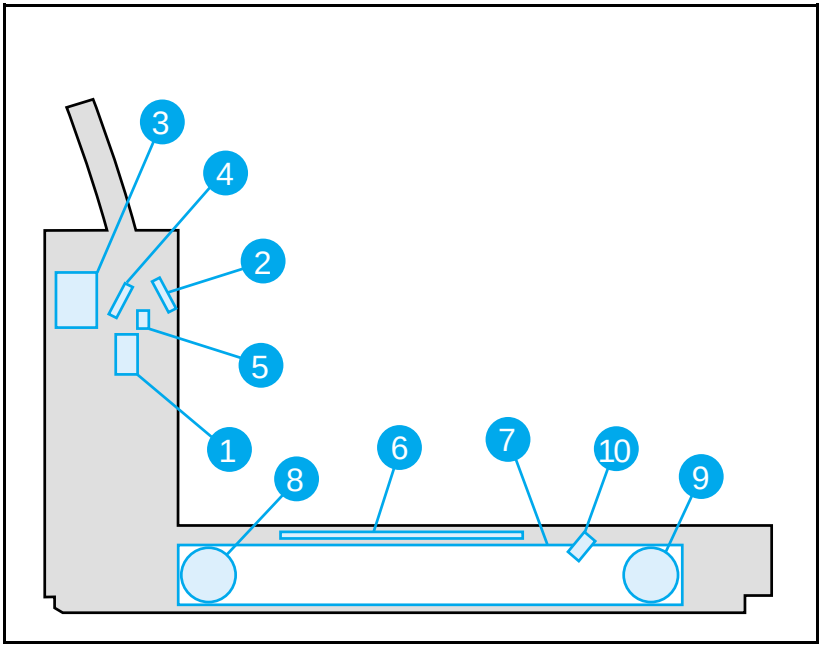

Figure A-2 Duplexer Major Components

Electrical Overview

The block diagram in Figure A-3 shows the Duplexer electrical components.

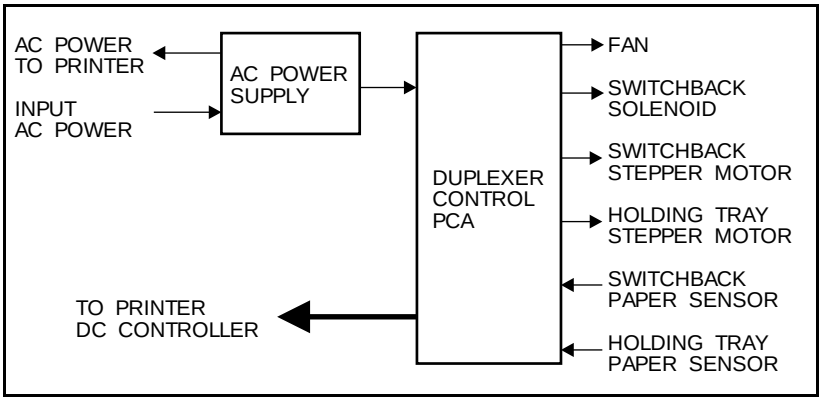

Figure A-3 Electrical Block Diagram

Installing the Optional Duplexer

The optional Duplexer can be installed by the customer. There are no fasteners securing the units together. The printer simply rests in place on top of the Duplexer, which, in turn, rests on top of the optional 500-sheet Lower Cassette, if used.

To install the Duplexer, first turn power OFF and disconnect all cables from the printer. Follow the steps below, referring to the corresponding steps illustrated in Figure A-4.

- Open the printer's rear door and use needle-nose pliers to release the door strap from the printer.

LJ 4 +

- Grasp the plastic retaining clip and lift it upward and away from the door.
- Slide the door toward the left.
- Swing the right end of the door out from the printer and slide it toward the right to free it from its hinge.

LJ 5

- Flex the rear door to release it from its hinges. (Press the middle of the door while lifting either side.)

- Place the Duplexer on a flat surface and tilt the Switchback Assembly partially back.
- Verify the alignment pins on the Duplexer mate with the holes in the bottom of the printer, and if used, the top of the optional 500-sheet Lower Cassette. Place the printer on top of the Duplexer.
- Close the rear door (Switchback Assembly) and plug in all cables - note routing of the power cables as shown.

Note

Removal of the Duplexer from the printer is the reverse of installation - simply unplug cables, unlatch the Switchback Assembly, and lift the printer off the top. If the optional 500-sheet Lower Cassette is being used, lift the duplexer off the Lower Cassette.

For further information, refer to the illustrated steps in Figure A-4 on the next page.

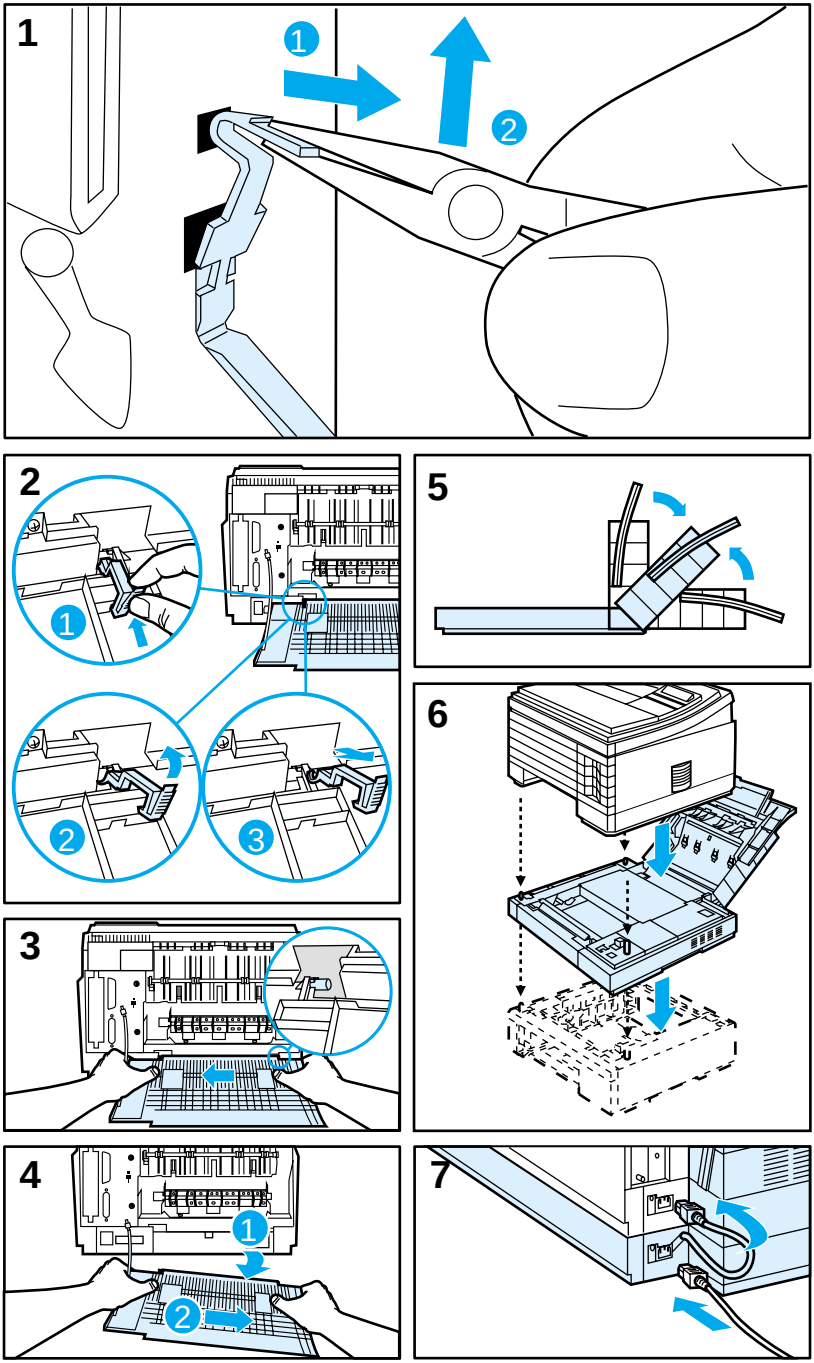

Figure A-4 Duplexer Installation/Removal

Removal and Replacement

This section describes the complete disassembly of the Duplexer. Tasks that must be performed before beginning the procedure are listed first. Remove the assemblies in the order listed to prevent damage.

The assembly procedure is the reverse of the removal procedure, except where specific instructions are provided.

In the removal and replacement procedures that follow, the number inside the parentheses, such as (4), refers to the number of screws to remove.

Warning

Power OFF the printer and disconnect the power cord from the outlet and the printer before servicing the Duplexer.

Some sheet metal edges are sharp. Be careful when working in these areas to avoid being cut.

Caution

The Duplexer contains parts that are sensitive to Electro-Static Discharge (ESD). Always observe proper ESD procedures when servicing the Duplexer.

This symbol ESD appears when the parts being serviced are especially susceptible to ESD damage.

Required Tools

#2 Magnetized Phillips Screwdriver
Small Flat-head Screwdriver (6-inch shaft)
Needle-nose Pliers

Caution

Do not use a Pozidriv screwdriver. Damage to the screw heads will result.

Removing the Covers

Removing the Switchback Covers

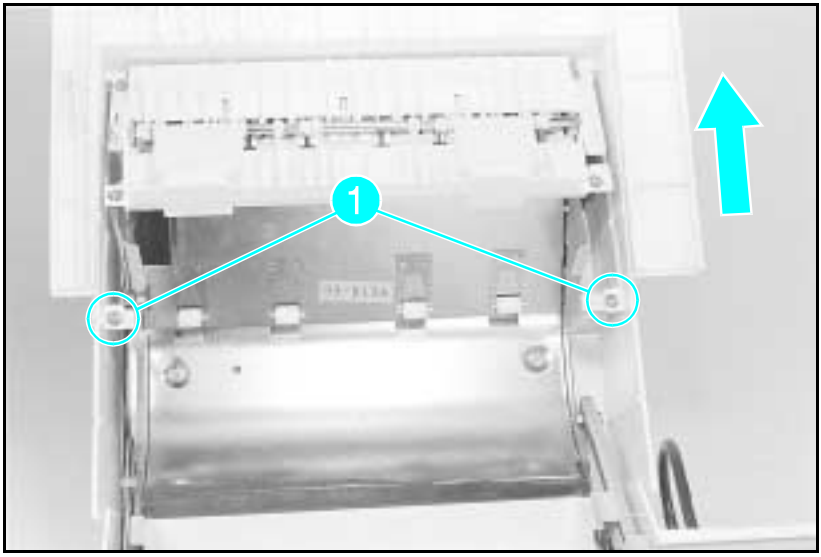

Figure A-5 Switchback Cover

1 Remove the (2) screws shown in Figure A-5, callout 1.
2 Lift the cover off the Switchback Assembly.

Removing the Side Cover on Power Side

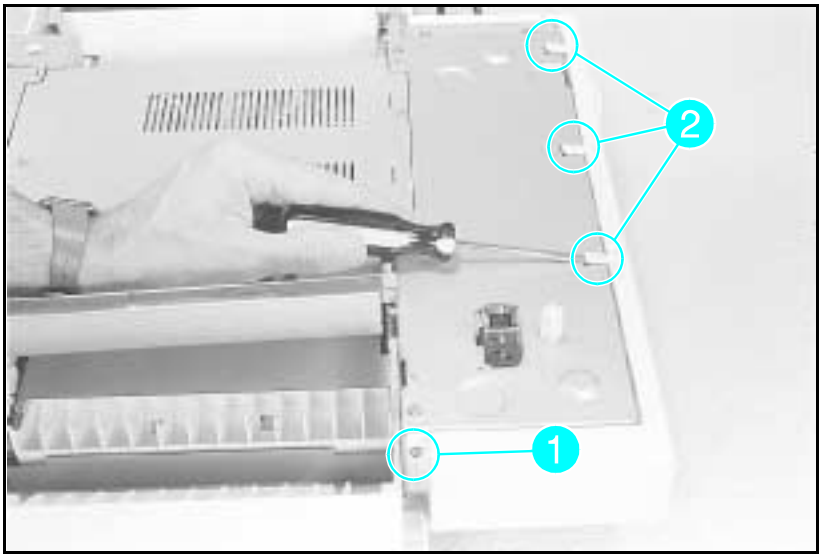

Figure A-6 Side Cover

1 Open the front door.
2 Remove the (1) screw shown in Figure A-6, callout 1.
3 Release the (3) latch points with a flat screwdriver and rotate the cover downward (see Figure A-6, callout 2).

Removing the Side Cover on Gear Side

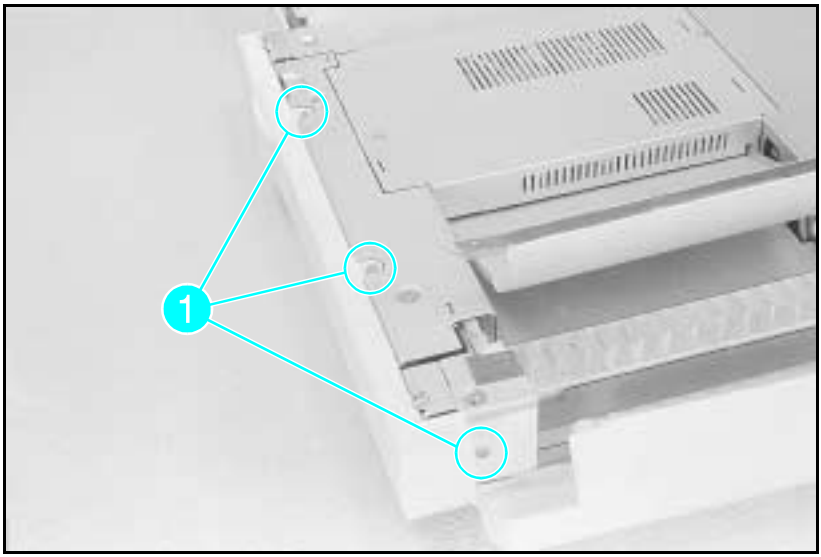

Figure A-7 Side Cover on Gear Side

1 Remove the (2) screws on top and the (1) screw on the front (see Figure A-7, callout 1).
2 Turn the Duplexer on its side to access the latch location on the underside.
3 Release the (1) latch point with a flat screwdriver and lift the cover off (see Figure A-8).

Figure A-8 Latch Location on Underside of Duplexer

Removing the Back Cover

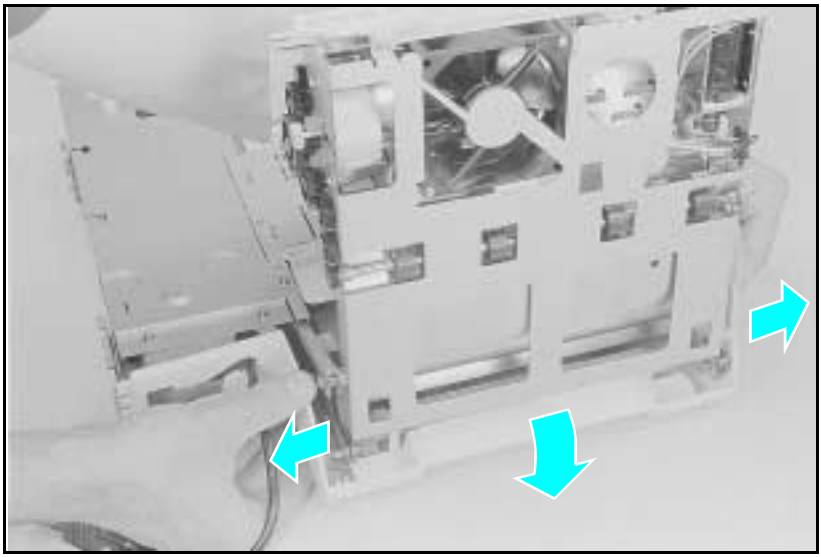

Figure A-9 Back Cover

1 Place the duplexer on a table or bench so that the back overhangs the edge by a few inches.
2 Release the (2) locating pins as shown in Figure A-9.
3 Rotate the cover downward until it is free.

Removing the Front Cover

With the side covers removed, the front cover is only attached by the holding tray arm.

1 With both side covers removed, open the holding tray.
2 Rotate the front cover 90 degrees to release the holding tray arm.

Removing Internal Duplexer Components

Removing the Fan/Motor/Solenoid/Sensor

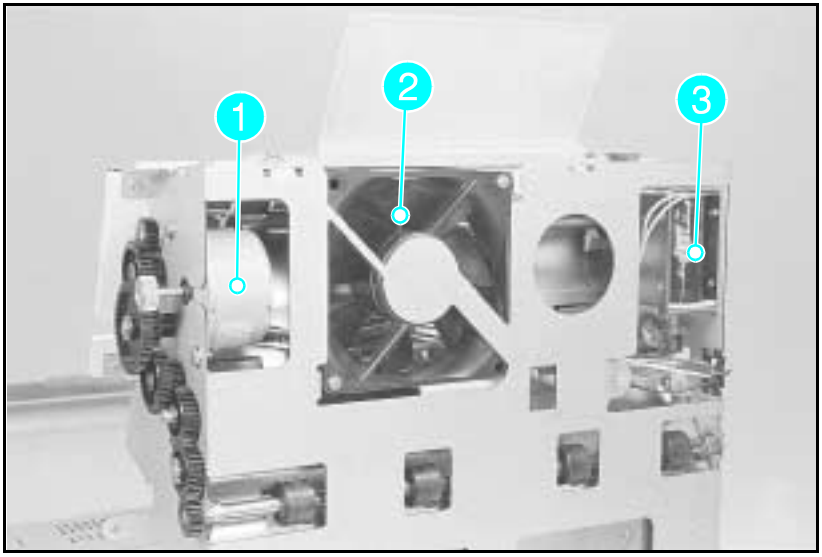

Figure A-10 Switchback Assembly - Stepper Motor Side

Access to the electronic components of the switchback assembly is easy once the covers are removed. Note the location of the switchback stepper motor (Figure A-10, callout 1), the switchback fan assembly (callout 2) and the switchback solenoid (callout 3).

Removing the Switchback Paper Guide

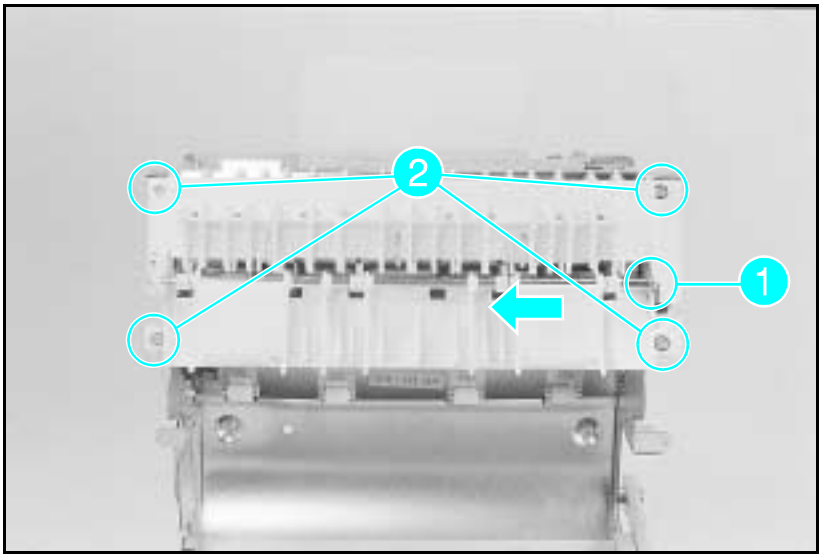

Figure A-11 Switchback Paper Guide

1 Remove the (1) E-clip from the shaft on the stepper motor side shown in Figure A-11, callout 1.
2 Pull the shaft toward the left and out of its track.
3 Rotate the shaft 90 degrees to remove it from the metal paper guide solenoid arm.

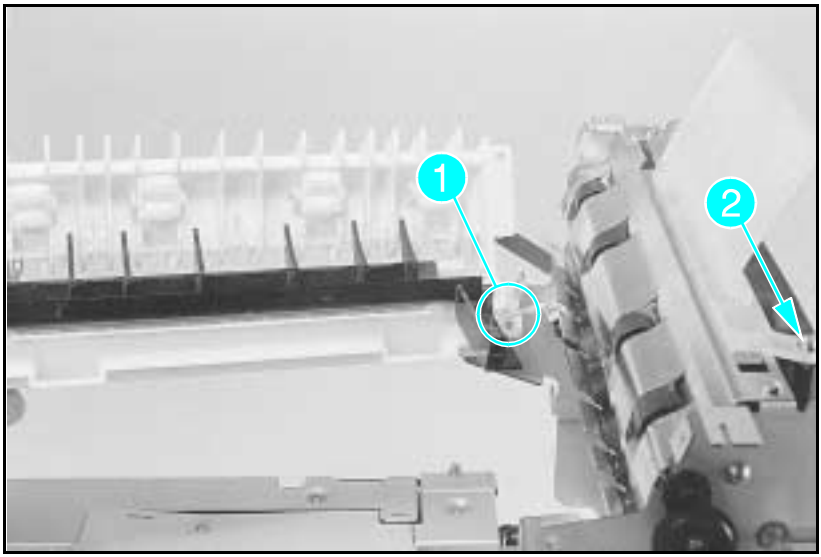

Figure A-12 Wire Routing and Upper Switchback Guide Screw

1 Remove the (4) screws shown in Figure A-11, callout 2.
2 Lift the switchback assembly and clear the wires.
3 Remove the assembly.

Note: When re-assembling, verify proper wire routing as shown in Figure A-12, callout 1.

Removing the Paper Roller

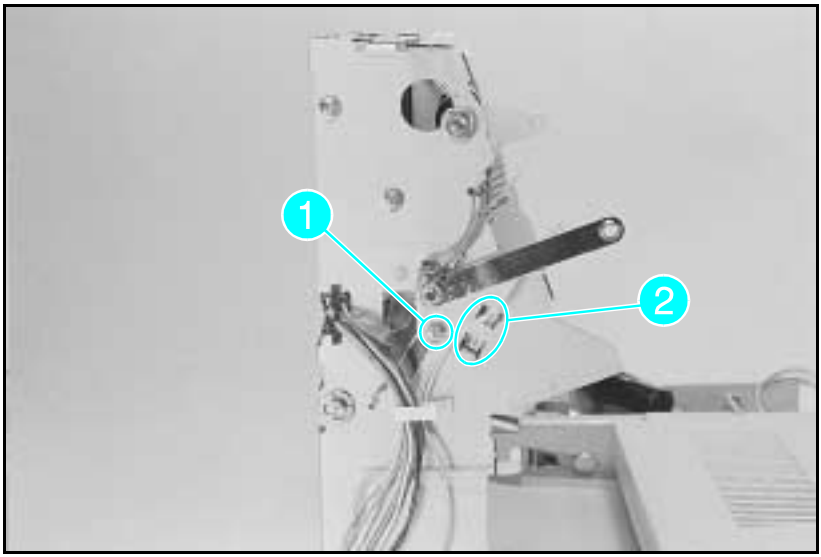

Figure A-13 Solenoid Arm

1 Remove the (1) screw below the Switchback Solenoid Arm on the gear side as shown in Figure A-13, callout *1*.
2 Remove the sensor, squeezing the tabs on the underside of the sensor (see Figure A-13, callout *2*).

(continued on next page)

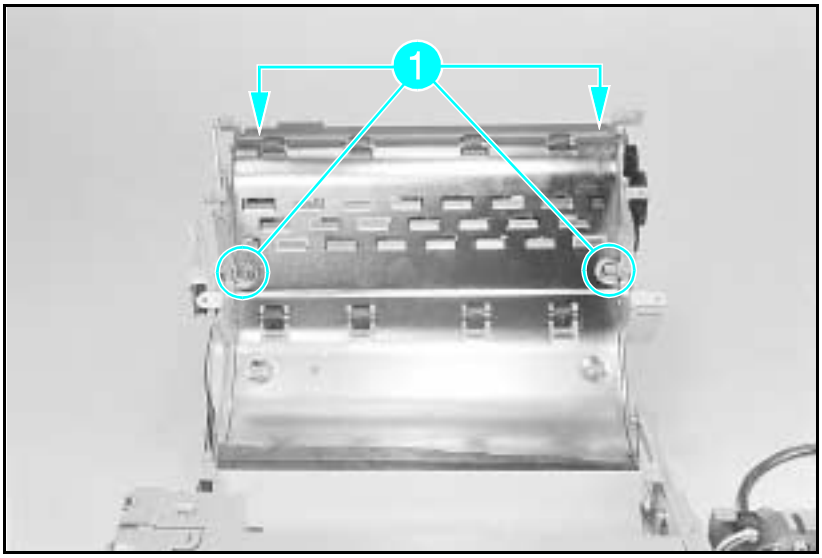

Figure A-14 Upper Paper Guide Sheet Metal

3 Remove the (1) screw shown previously in Figure A-12, callout *2*. Remove the upper switchback paper guide by releasing its latch with a flat screwdriver and pushing to the side.

4 Remove the (4) screws on top of the sheet metal part of the upper paper guide shown in Figure A-14, callout *1*.

(continued on next page)

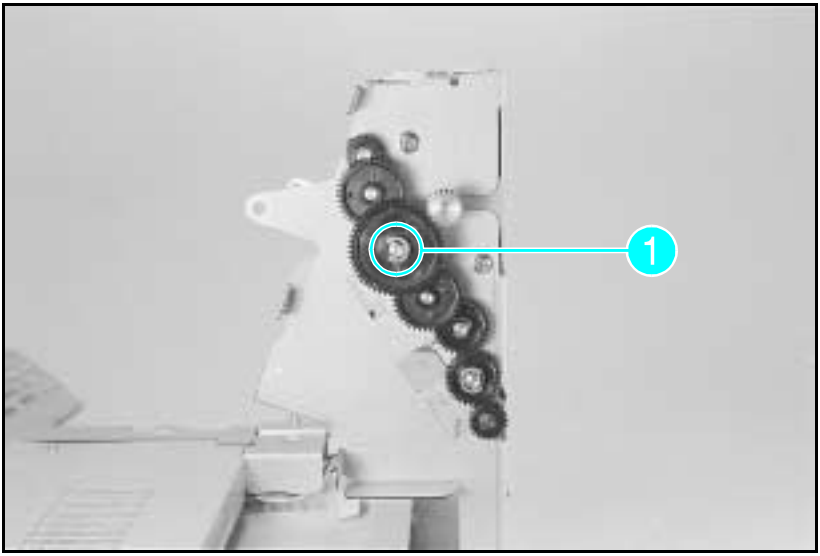

Figure A-15 Gears on Paper Roller

5 Remove the (1) E-clip from the gears on the shaft on the Power PCA side shown in Figure A-15, callout *1*.

6 Rotate the bushings and lift the roller out.

Removing the Control PCA

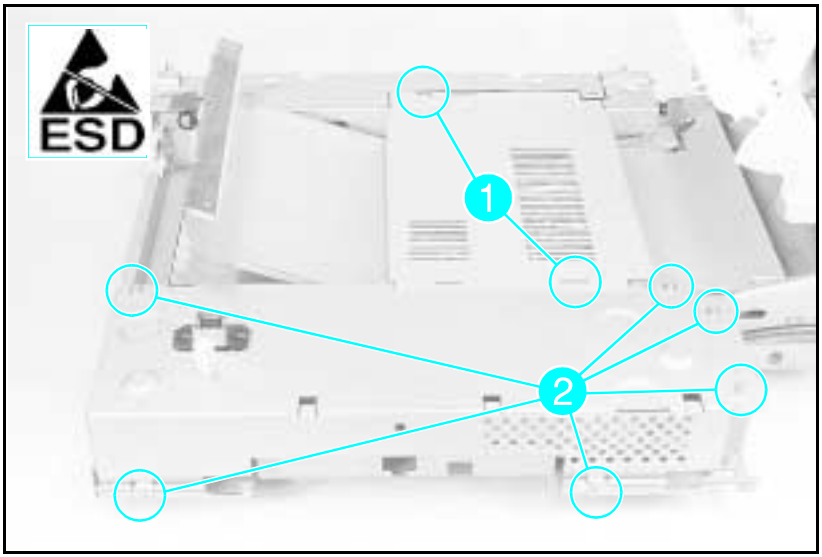

Figure A-16 Cover Plate

1 Remove the (2) screws shown in Figure A-16, callout *1*.
2 Remove the cover plate.

(continued on next page)

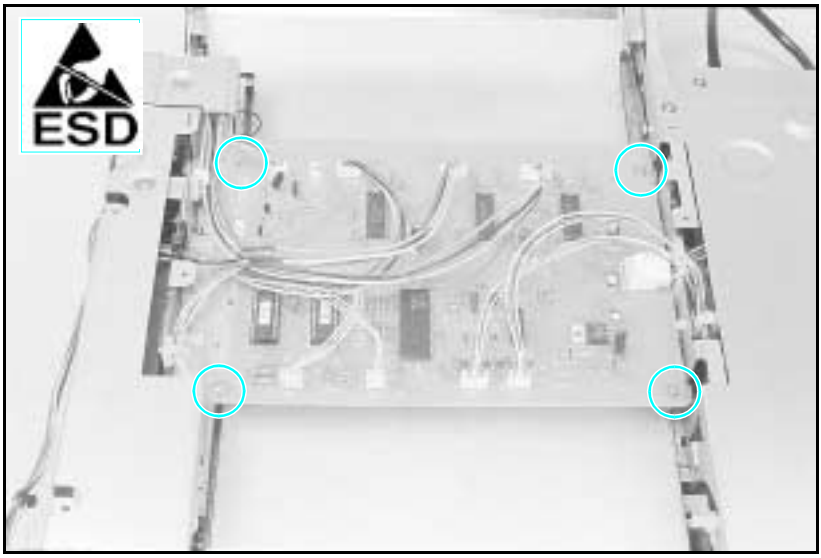

Figure A-17 Control PCA

3 Unplug all connectors from the Control PCA.

Note The Control PCA connectors are keyed.

4 Remove the (4) screws shown in Figure A-17.
5 Disconnect the connector from the power supply.
6 Remove the PCA.

Removing the Power PCA

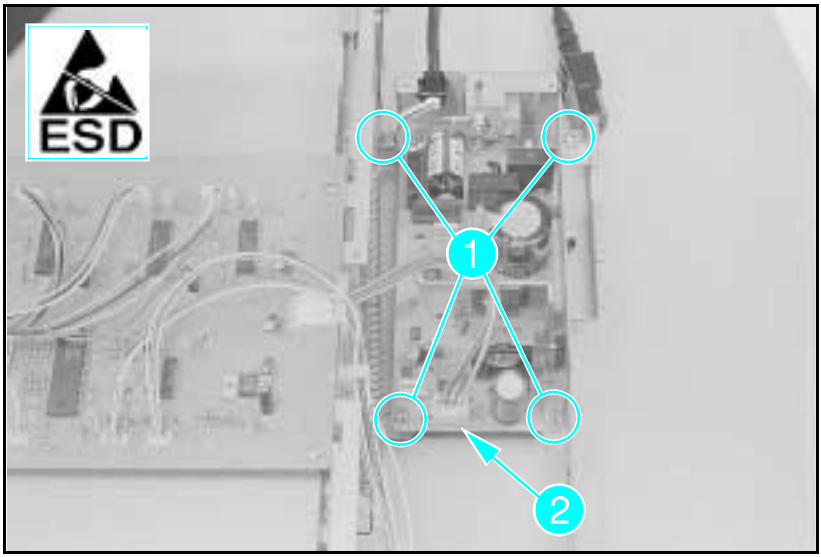

Figure A-18 Power PCA

1 Remove the (6) cover screws, (4) on the top and (2) on the side. Remove the cover.
2 Remove the (4) screws from the Power PCA (see Figure A-18, callout *1*).
3 Unplug the connector (see Figure A-18, callout *2*).
4 Lift the Power PCA out of the duplexer.

Removing the Holding Tray Center Paper Guide

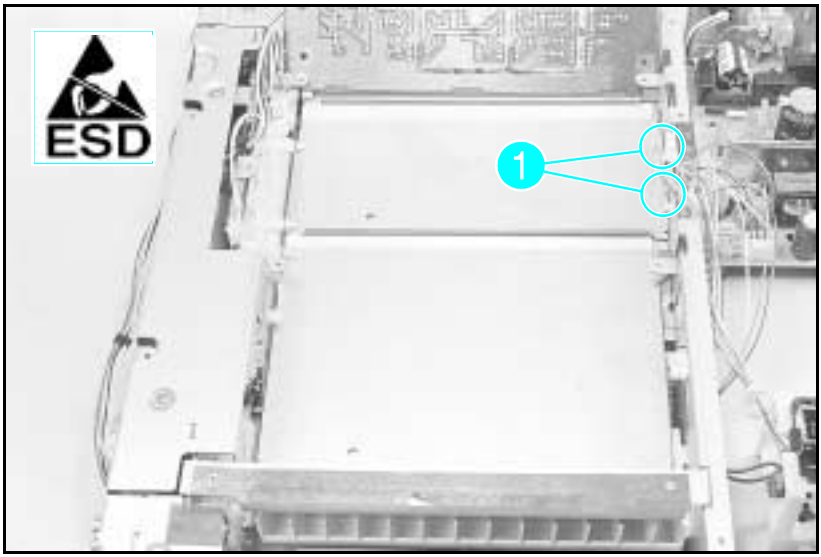

Figure A-19 Plate on Power PCA Side of Duplexer

1 Remove the Control PCA as described earlier.
2 Remove the (2) screws from the plate located on the power PCA side of the duplexer (see Figure A-19, callout *1*).
3 Lift off the guide.

Removing the Holding Tray Belt

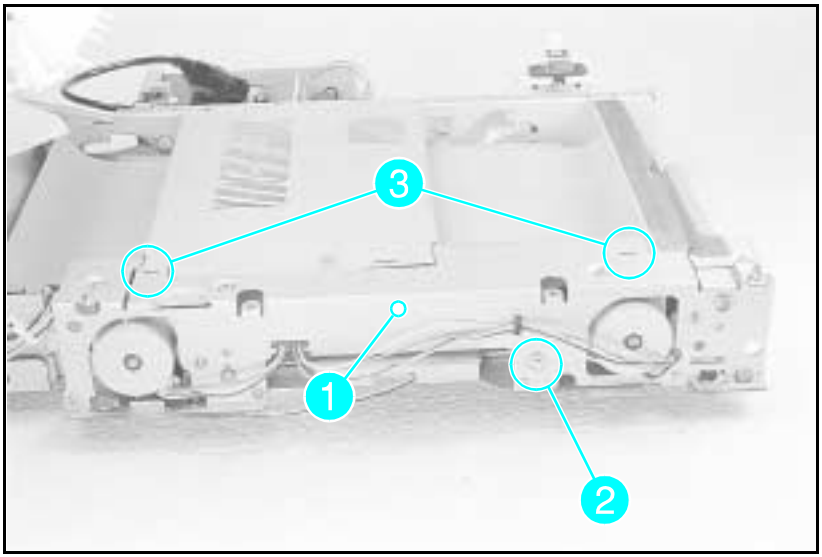

Figure A-20 Holding Tray Belt Cover Plate

1 Remove all the screws securing the plate (see Figure A-20, callout 1).
2 Remove (1) E-clip shown in Figure A-20, callout *2*.
3 Remove the bushing underneath the E-clip.
4 Release (2) latch points shown in Figure A-20, callout *3*.

Note: The (2) washers on the gear beside the bushing are now loose. Remove and set aside.

5 Release the wires from the wire holder, allowing the cover to move aside to access the gears.

(continued on next page)

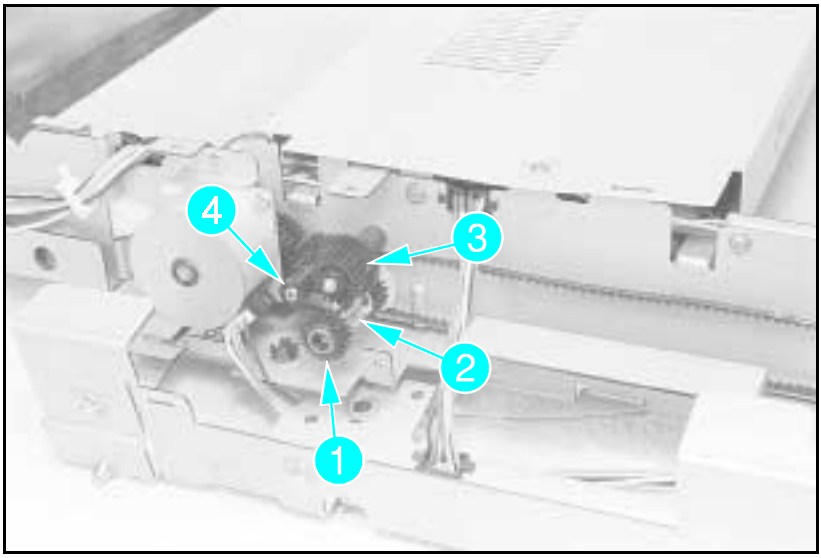

Figure A-21 Holding Tray Gears and Belt

6 Remove the (1) one-way gear shown in Figure A-21, callout *1*.

Note The one-way gear must be reassembled correctly. With the gear on the shaft, turn the gear clockwise. The shaft should move the belt. Turning the gear counter clockwise should result in no movement of the shaft and belt.

7 Remove the (1) E-clip from behind the first gear (see Figure A-21, callout 2).

8 Remove the (2) gears shown in Figure A-21, callouts *3* and *4*.

9 Slip the belt off the gears.

Note Verify proper wire routing when reassembling.

Removing the Holding Tray Paper Sensor

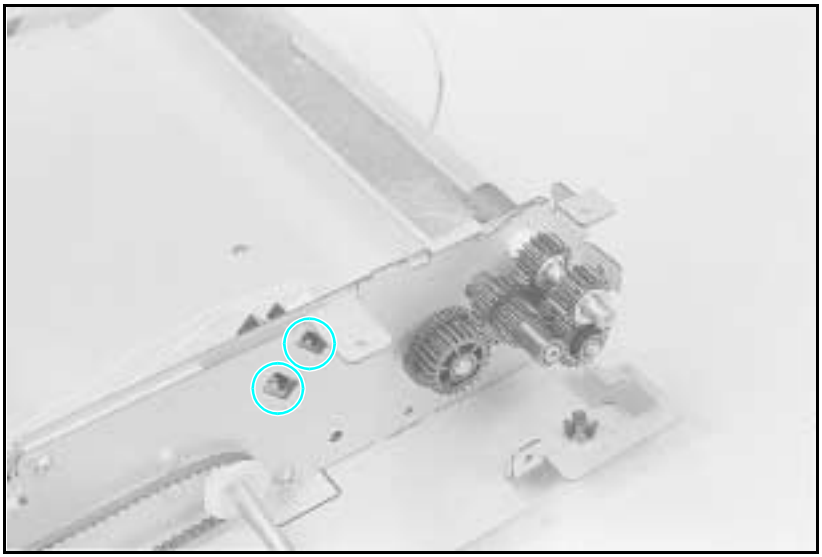

Figure A-22 Holding Tray Paper Sensor

1 Release the output holding tray.
2 Remove the (2) screws from the stepper motor mount and remove mount. (This provides access to the paper sensor latches.)
3 Squeeze the (2) latch points of the paper sensor to release (see Figure A-22).
4 Disconnect the connector and remove the paper sensor.

Removing the Switchback Assembly

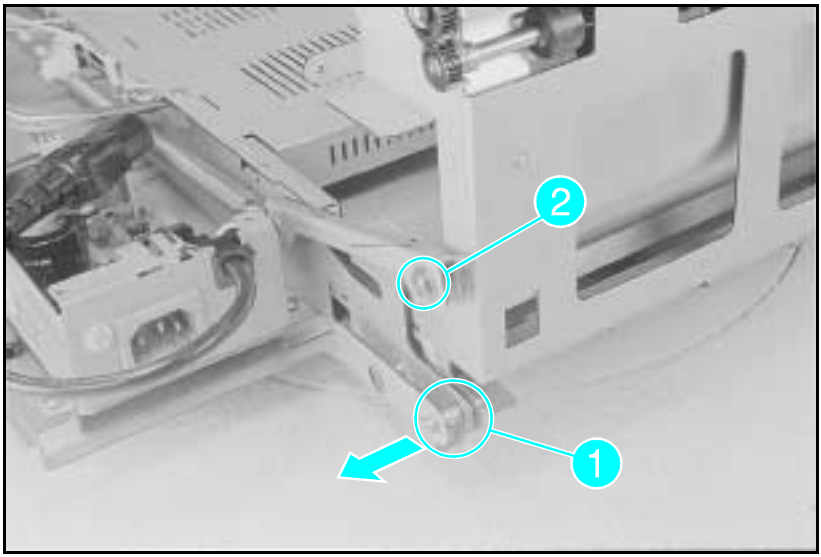

Figure A-23 Switchback Assembly Hinge Pins

1 Pull out the pin located on the Power PCA side (see Figure A-23, callout *1*).
2 Release the (1) E-clip on the upper pin near the retaining arm (see Figure A-23, callout *2*).
3 Pull the retaining arm off the pin.
4 Rotate the switchback assembly and remove.
5 Unplug the connectors.

Parts and Diagrams for the Duplexer

The figures in this section illustrate the major subassemblies and component parts of the HP LaserJet 4+/5 Duplexer.

Note

Not all duplexer parts are orderable. The parts listed are the only orderable parts. Parts that have no reference designator or part number are not field-replaceable and cannot be ordered through HP.

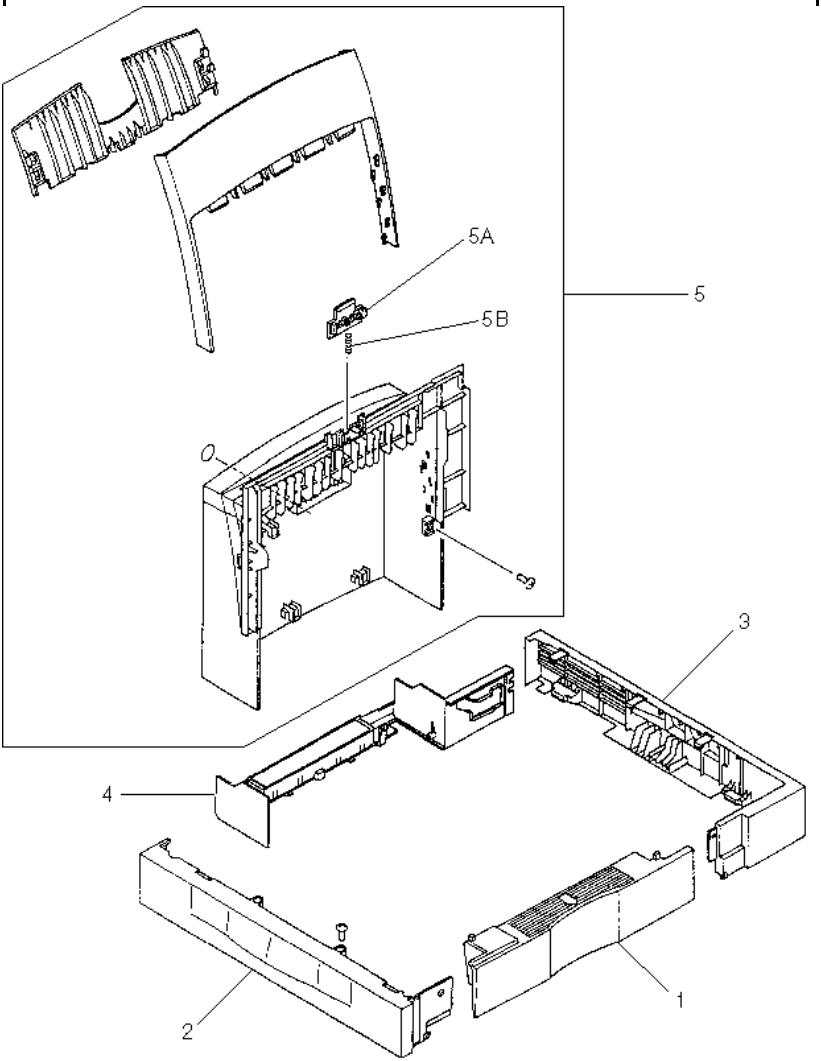

Figure A-24 Duplex External Covers

Table A-24 Duplex External Covers

Ref	Part #	Notes	Description
1	RA2-2061-000CN RA2-2231-000CN	LJ4+ LJ5	Front Cover
2	RA2-2096-000CN RA2-2232-000CN	LJ4+ LJ5	Left Cover
3	RA2-2097-000CN RA2-2233-000CN	LJ4+ LJ5	Right Cover
4	RA2-2098-000CN RA2-2237-000CN	LJ4+ LJ5	Rear Lower Cover
5	RG1-3508-000CN RG1-3570-000CN	LJ4+ LJ5	Rear Cover Assembly
5A	RA2-2100-000CN	LJ4+	Latch
5B	RS1-2413-000CN RS5-2571-000CN	LJ4+ LJ5	Compression Spring

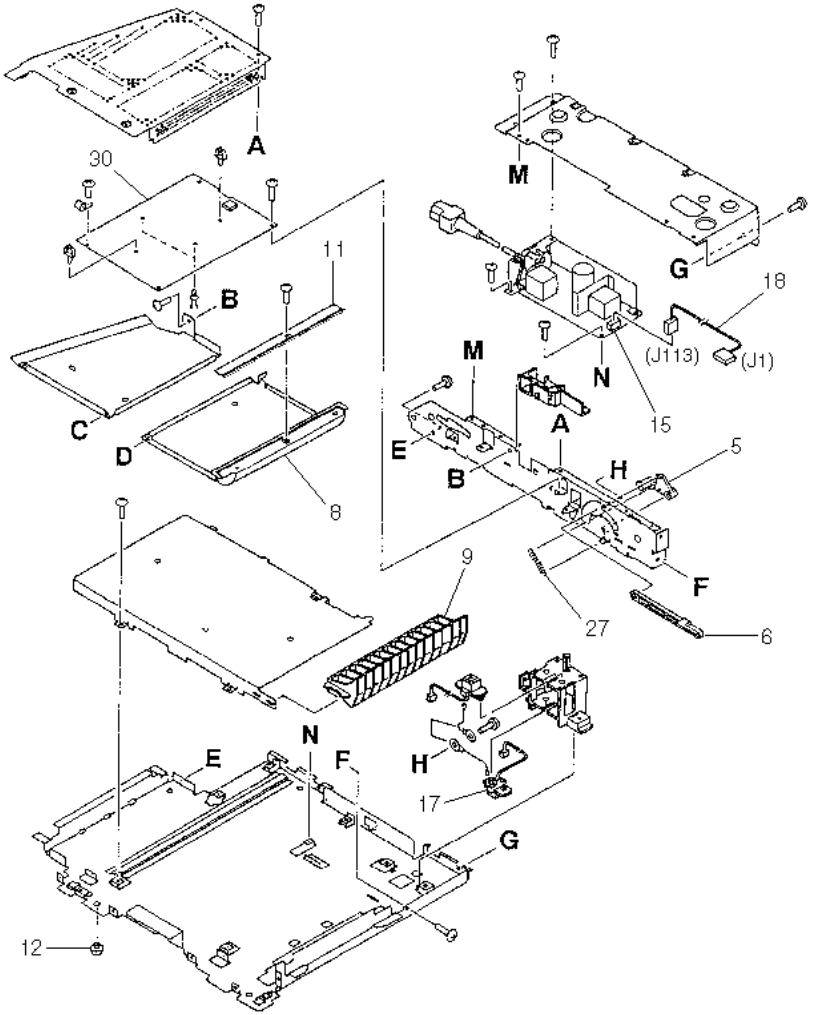

Figure A-25a Duplex Feeder Assembly (1 of 2)

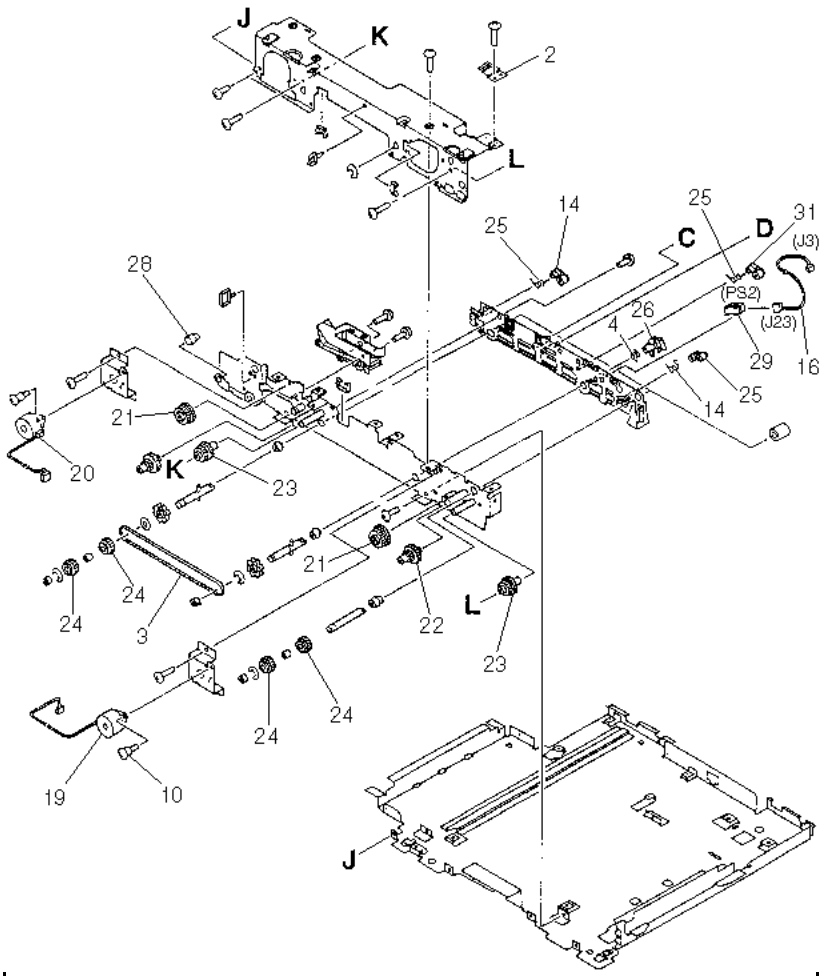

Figure A-25b Duplex Feeder Assembly (2 of 2)

Table A-25 Duplex Feed Assembly

Ref	Part #	Notes	Description
1	RA2-2069-000CN	LJ4+/5	PCA Shield Plate
2	RA2-2070-000CN	LJ4+/5	Static Eliminator sml
3	RA2-2072-000CN	LJ4+/5	Timing Belt
4	RA2-2076-000CN	LJ4+/5	Sensor Arm
5	RA2-2078-000CN	LJ4+/5	Rod Crank
6	RA2-2079-000CN	LJ4+/5	Front Cover Rod
7	RA2-2081-000CN	LJ4+/5	Hold Tray Rear Guide
8	RA2-2082-000CN	LJ4+/5	Hold Tray Front Guide
9	RA2-2085-000CN	LJ4+/5	Front Guide
10	RA2-2115-000CN	LJ4+/5	Stepped Scr M3 by 6.5
11	RA2-2126-000CN	LJ4+/5	Static Eliminator
12	RB1-2114-000CN	LJ4+/5	Foot (Qty 4)
13	RB1-2155-000CN	LJ4+/5	Oblique Roller
14	RF1-3805-000CN	LJ4+/5	Roller Holder (Qty 3)
15	RG1-3503-000CN	LJ4+/5	Power Supply Assembly
16	RG1-3530-000CN	LJ4+/5	Paper Pickup Cable
17	RG1-3531-000CN	LJ4+/5	Paper Feed Cable
18	RG1-3533-000CN	LJ4+/5	Power Supply Cable
19	RF1-3807-000CN RF1-3815-000CN	LJ4+ LJ5	Front Holding Tray Mtr (M1)
20	RF1-3804-000CN RF1-3813-000CN	LJ4+ LJ5	Rear Holding Tray Mtr (M3)
21	RS1-0586-000CN	LJ4+/5	Gear 40T/24T (Qty 2)
22	RS1-0587-000CN	LJ4+/5	Gear 24T/18T (Qty 2)
23	RS1-0588-000CN	LJ4+/5	Gear 33T/20T (Qty 2)
24	RS1-0595-000CN	LJ4+/5	Gear Roller (Qty 4)

Ref	Part #	Notes	Description
25	RS1-2406-000CN	LJ4+/5	Torsion Spring (Qty 3)
26	RS1-2407-000CN	LJ4+/5	Torsion Spring
27	RS1-2409-000C N	LJ4+/5	Tension Spring
28	RS1-7010-000CN	LJ4+/5	Shaft
29	WG8-5210-000CN	LJ4+/5	Photo Interrupter
30	RG1-3501-000CN RG1-3582-000CN	LJ4+ LJ5	Duplex Control PCA
31	RF1-3817-00017	LJ5	Duplex Roller Holder

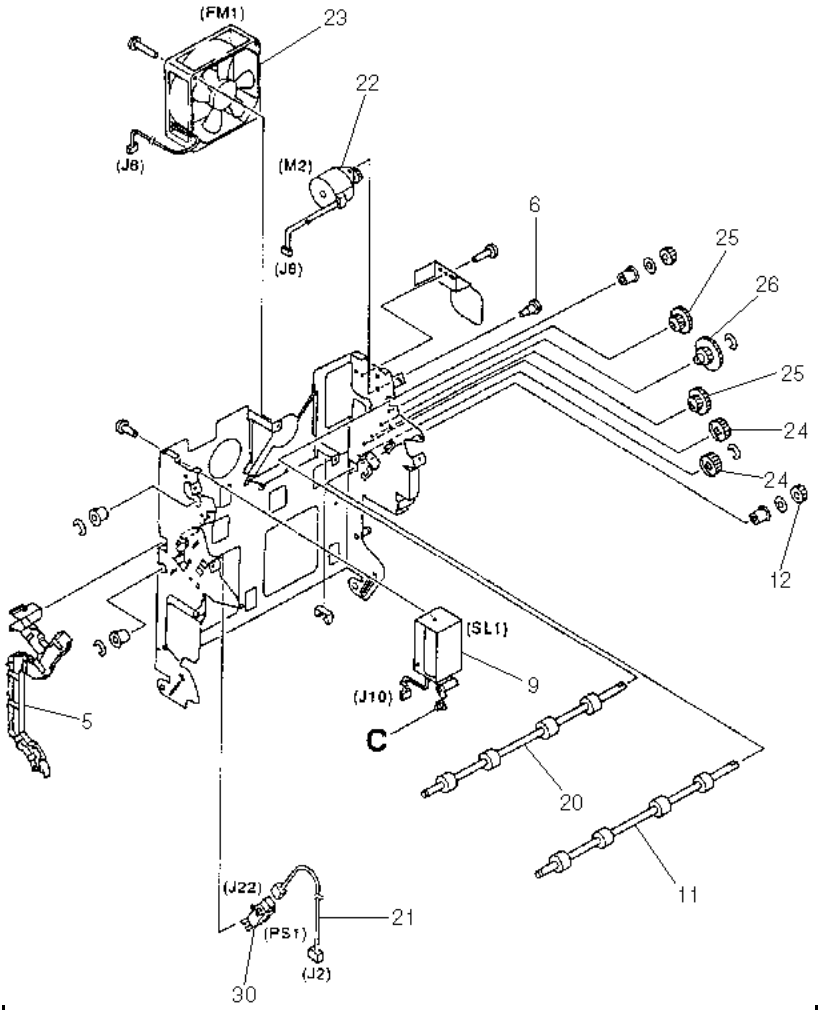

Figure A-26a Duplex Switchback Assembly (1 of 2)

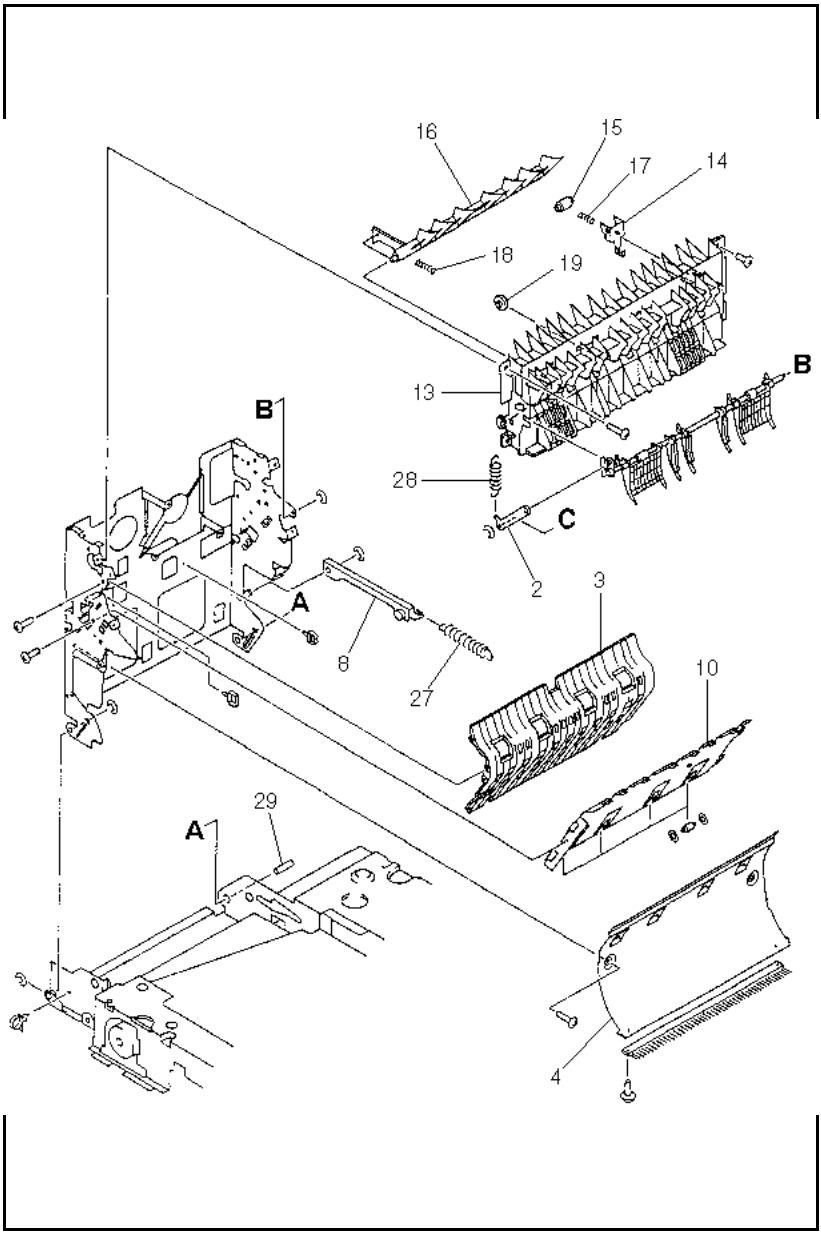

Figure A-26b Duplex Switchback Assembly (2 of 2)

Table A-26 Duplex Switchback Assembly

Ref	Part #	Notes	Description
1	RA2-2083-000CN	LJ4+/5	Static Eliminator
2	RA2-2087-000CN	LJ4+/5	Deflector Linkage
3	RA2-2094-000CN	LJ4+/5	Upper Feed Guide
4	RA2-2095-000CN	LJ4+/5	Lower Feed Guide
5	RA2-2112-000CN	LJ4+/5	Cable Cover
6	RA2-2116-000CN	LJ4+/5	Stepped Screw 3 By 6.9 (Qty 2)
7	RA2-2119-000CN	LJ4+/5	Paper Deflector
8	RF1-3806-000CN	LJ4+/5	Holding Tray Linkage
9	RF1-3808-000CN	LJ4+/5	Switchback Solenoid (SL1)
10	RF1-3811-000CN	LJ4+/5	Paper Feed Guide
11	RA2-2118-000CN	LJ4+/5	Paper Roller Shaft
12	RS1-0589-000CN	LJ4+/5	Gear 22T (Qty 2)
13	RA2-2088-000CN	LJ4+/5	Switchback Guide
14	RA2-2089-000CN	LJ4+/5	Roller Holder (Qty 4)
15	RA2-2093-000CN	LJ4+/5	Roller (Qty 4)
16	RA2-2090-000CN	LJ4+/5	Switchback Deflector
17	RS1-2411-000CN	LJ4+/5	Roller Holder Spring (Qty 4)
18	RS1-2412-000CN	LJ4+/5	Deflector Spring (Qty 4)
19	RA2-2102-000CN	LJ4+/5	Guide Roller (Qty 3)
20	RA2-2124-000CN	LJ4+/5	Roller Shaft
21	RG1-3529-000CN	LJ4+/5	Switchback Sensor Cbl
22	RF1-3801-000CN RF1-3814-000CN	LJ4+ LJ5	Switchback Stepper Mtr (M2)
23	RH7-2135-000CN	LJ4+/5	Switchback Fan (FM1)
24	RS1-0590-000CN	LJ4+/5	Gear 32T (Qty 2)

Ref	Part #	Notes	Description
25	RS1-0591-000CN	LJ4+/5	Gear 39T/22T (Qty 2)
26	RS1-0592-000CN	LJ4+/5	Gear 29T/54T
27	RS1-2408-000CN	LJ4+/5	Switchback Tension Spring
28	RS1-2410-000CN	LJ4+/5	Deflector Tension Spring
29	RS1-7009-000CN	LJ4+/5	Switchback Hinge Pin
30	WG8-5210-000CN	LJ4+/5	Photo Interrupter (PS1)

B

LaserJet 5/5M/5N Printer

The Combined Service Manual contains information to be used with the LaserJet4/4+/4M/4M+/5/5M/5N. In special circumstances, the information in Chapters 1 and 3 will not pertain specifically to the LaserJet 5/5M/5N printer (such as the control panel information). This Appendix contains the information that is specific for the LaserJet 5/5M/5N printers.

The Product Information shows feature comparisons of the LaserJet 5/5M/5N with the LaserJet 4+/4M+ and a product compatibility matrix. Also included in this Appendix are specifications for the LaserJet 5/5M/5N, Related Documentation, Safety Information, Control Panel information, Service Mode instructions, PCL Self Test Printout information, and Infrared troubleshooting information.

Please note that if the information you are looking for is not found in this Appendix, please see Chapters 1 through 8, Appendix A, or the Service Notes section.

Product Information

Table B-1 Printer Features

Features	HP LJ 4+	HP LJ4M+	HPLJ5	HPLJ5M	HPLJ5N
Model	C2037A	C2039A	C3916A	C3917A	C3952A
Printer Speed	12 ppm	12 ppm	12 ppm	12 ppm	12 ppm
Resolution	300/600 dpi	300/600 dpi	300/600 dpi	300/600 dpi	300/600 dpi
Expandable I/O Buffer	Yes	Yes	Yes	Yes	Yes
Resource Savings	Yes	Yes	Yes	Yes	Yes
MEt	Yes	Yes	Yes	Yes	Yes
REt	Yes	Yes	Yes	Yes	Yes
Languages	Enhanced PCL5	Enhanced PCL5, Postscript Level 2	HP PCL 6	HP PCL 6, Postscript Level 2	HP PCL 6
PostScript Upgradeable	C3129A*	N/A	C3918A	N/A	C3918A
Resident Memory	2 MByte	6 MByte	2MByte	4MByte	2MByte
Printer Max. Memory Capacity	66 MByte	50 MByte	66 MByte	52 MByte	66 MByte
Available Memory Slots	Four	Two **	Four	Three	Four
PC Tray (Tray 2) Capacity	250 Sheets	250 Sheets	250 Sheets	250 Sheets	250 Sheets
MP Tray (Tray 1) Capacity	100 Sheets	100 Sheets	100 Sheets	100 Sheets	100 Sheets
Output Capacity	250 Sheets	250 Sheets	250 Sheets	250 Sheets	250 Sheets
500 Sheet Optional Feeder	C2083D	C2083D	C3921A	C3921A	C3921A
Duplex Option	C3157A	C3157A	C3920A	C3920A	C3920A
Envelope Feeder	C2082B	C2082B	C3927A	C3927A	C3927A
Typefaces	45 PCL	45 PCL 35 Postscript	45 PCL FontSmart	45 PCL 35 Postscript FontSmart	45 PCL FontSmart

Features	HP LJ 4+	HP LJ4M+	HPLJ5	HPLJ5M	HPLJ5N
Interfaces	Serial (9 pin) Parallel	Serial (9 pin) Parallel Local Talk	Serial (9 pin) Parallel Local Talk Ethernet Serial Infrared***	Serial (9 pin) Parallel Local Talk Ethernet Serial Infrared***	Serial (9 pin) Parallel 10-baseT Serial Infrared***
MIO Slots	1	1	1	1	1
EconoMode	Yes	Yes	Yes	Yes	Yes
Cartridge Slot	Yes	Yes	No	No	No
Power Save	Yes	Yes	Yes	Yes	Yes
Monthly Usage (pages)	Up to 20,000	Up to 20,000	Up to 35,000	Up to 35,000	Up to 35,000

*The PostScript upgrade requires an additional 4 MB SIMM.
**PostScript & Memory SIMM already occupy 2 slots.
***Requires C2929A IR transceiver pod.

Product Family Information

The model HP C3916A, C3917A, and C3952A are very similar from a hardware service standpoint. The models HP C2039A and C3917A printers add the following features:

- PostScript Level 2 SIMM
- AppleTalk MIO Card
- 4 MBytes of RAM (2 MBytes for the C3917A)

The model HP C3952A adds a 10-baseT MIO card to the base C3916A printer.

In every instance the repair procedures for all LaserJet 4+ and LaserJet 5 printers products are very similar.

Some LaserJet 4+ accessories are compatible with the LaserJet 5/5M/5N and some are not. The compatibility chart below may be used when there is a question of accessory compatibility.

Table B-2 Product Family Compatibility Matrix

Accessory	Description	Work in the LaserJet 4?	Work in the LaserJet 4 Plus?	Work in the LaserJet 5?
C2082A	Envelope Feeder	Yes	No	No
C2082B	Envelope Feeder	Yes	Yes	No
C3927A	Envelope Feeder	No	No	Yes
C2083A	Optional 500 Sheet Feeder Assembly	Yes	No	No
C2083D	Optional 500 Sheet Feeder Assembly	Yes	Yes	No
C3921A	Optional 500 Sheet Feeder Assembly	No	No	Yes
C2085A	250 Sheet Universal PC tray	Yes	No	No
C2085D	250 Sheet Universal PC tray	No	Yes	No
C3924A	250 Sheet Universal Tray 2	No	No	Yes
C2080A	PostScript SIMM	Yes	No	No
C3129A	PostScript SIMM	No	Yes	No
C3918A	PostScript SIMM	No	No	Yes
C3930A	Flash SIMM 2 MB	No	No	Yes
C3931A	Flash SIMM 4 MB	No	No	Yes
C2063A	Memory (1 MByte)	Yes	Yes	Yes
C2064A	Memory (2 MByte)	Yes	Yes	Yes
C2065A	Memory (4 MByte)	Yes	Yes	Yes
C2066A	Memory (8 MByte)	Yes	Yes	Yes
C3130A *	Memory (1 MByte)	No	Yes	Yes
C3131A *	Memory (2 MByte)	No	Yes	Yes
C3132A*	Memory (4 MByte)	No	Yes	Yes
C3133A*	Memory (8 MByte)	No	Yes	Yes
C3146A *	Memory (16 MByte)	No	Yes	Yes
C3157A	Duplex Assembly	No	Yes	No
C3920A	Duplex Assembly	No	No	Yes
92298A	Toner Cartridge	Yes	Yes	Yes

*If HP LaserJet 4 Plus/5 Optional Memory (C3130A, C3131A, C3132A, C3133 or C3146A) is installed in the HP LaserJet 4, the printer will display a “53.1X.08 ERROR” (X indicates the position of the SIMMs slot).

Identification

The model number is on a label placed on the outside, rear cover of the printer. The model number (C3916A, C3917A, or C3952A) is found at the top of the label. The model number is the base number for all printers.

The serial number contains information about the printer. The serial number Alpha section refers to the Country of Origin, the Revision Level and the Production Code. The Numeric section refers to the production number of the printer. See the following for information about the production codes.

A typical serial number would consist of: **CC R P XXXXXX**

Code	*Meaning*
CC	Country of Origin
R	Revision Number - Alphanumeric, no vowels
P	Production Code - Alphanumeric, no vowels
XXX-XXXX	Numeric serial number - Numeric, no alphas

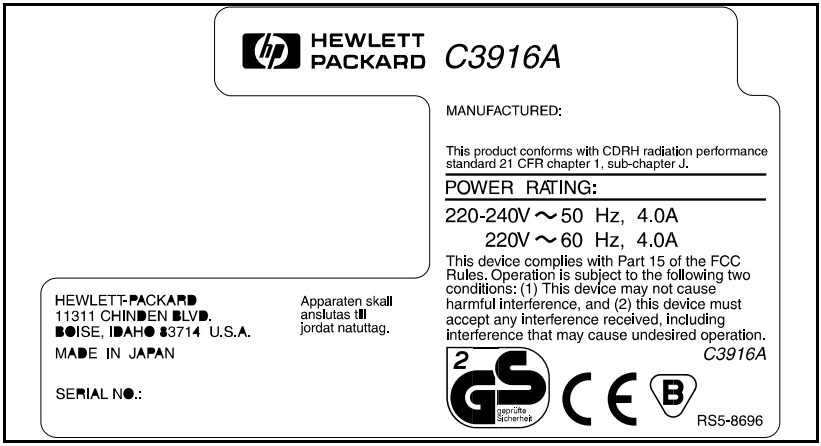

Figure B-1 Printer Identification Label for the HP LaserJet 5/5M/5N

Specifications

HP LaserJet 5 / 5M / 5N

Table B-3 Printer Dimensions

Dimension	HP LaserJet 5
Width	16.4 in (415mm)
Depth	15.9 in (403 mm)
Height	11.7 in (297 mm)
Weight (with toner cartridge)	37 lbs. (16.8 kg)

Table B-4 Power Specifications

Volts	Freq	Watts (typical)		
		Printing	Standby	PowerSave
100 Vac ± 10% 120 Vac ± 10%	50/60 Hz ± 2 Hz 50/60 Hz ± 2 Hz	290 290	100 100	18-24 18-24
220 Vac ± 10% 240Vac ± 10%	50/60 Hz ± 2 Hz 50/60 Hz ± 2 Hz	290 290	100 100	18-24 18-24

Table B-6 Electrical Specifications

Status	100/115 V	220/240 V
Recommended Minimum Circuit Capacity	11.2 amps	5.0 amps
Peak Inrush Current	19-34 amps	17-40amps
25% Decay Time	8.7-16.9 ms	1.4-9.9 ms
Peak Fuser Current	65-71 amps	29-34 amps
Return-to Average Time	375-475 ms	220-300 ms

Table B-5 Environmental Specifications

Operating Environment	**Temperature:** 10° C to 32.5° C (50° F to 90.5° F) **Humidity:** 20-80%
Storage/Standby Environment (not including toner cartridge)	**Temperature:** 0° to 35° C (32° to 95°F) **Humidity**: 10-95%
Maximum Duty Cycle	35,000 pages per month

Related Documentation

The following manuals can be ordered from Hewlett-Packard's Support Materials Organization (SMO). The phone number for SMO is (800) 227-8164.

Table B-7 Printer Documentation

HP LaserJet 5/5M/5N Documents—Description	Part Number
Getting Started Guide for the HP LaserJet 5/5M/5N Printer	C3917-90901
HP LaserJet 5/5M/5N User's Manual	C3916-90901
HP PCL5 Printer Language Technical Reference Package	5010-3994
HPJet Direct Network Installation Guide	J2552-90011
HPJet Direct Network Software Configuration Guide	J2552-90001
PostScript SIMM Technical Reference Guide	C3918-90901

Laser Statement (Sweden/Finland)

LASERTURVALLISUUS

LUOKAN 1 LASERLAITE
KLASS 1 LASER APPARAT

HP LaserJet(s) 5/5M/5N laserkirjoitin on käyttäjän kannalta turvallinen luokan 1 laserlaite. Normaalissa käytössä kirjoittimen suojakotelointi estää lasersäteen pääsyn laitteen ulkopuolelle.

Kirjoittimen on hyväksynyt Suomessa laserturvallisuuden osalta Sähkötarkastuskeskus. Laitteen turvallisuusluokka on määritetty valtioneuvoston päätöksen N:o 472/1985 ja standardin EN 60825 (1991) mukaisesti.

VAROITUS ! Laitteen käyttäminen muulla kuin käyttöohjeessa mainitulla tavalla saattaa altistaa käyttäjän turvallisuusluokan 1 ylittävälle näkymättömälle lasersäteilylle.

VARNING ! Om apparaten används på annat sätt än i bruksanvisning specificerats, kan användaren utsättas för osynlig laserstrålning, som överskrider gränsen för laserklass 1.

HUOLTO HP LaserJet (s)5/5M/5N Plus-kirjoittimen sisällä ei ole käyttäjän huollettavissa olevia kohteita. Laitteen saa avata ja huoltaa ainoastaan sen huoltamiseen koulutettu henkilö. Tällaiseksi huoltotoimenpiteeksi ei katsota väriainekasetin vaihtamista, paperiradan puhdistusta tai muita käyttäjän käsikirjassa lueteltuja, käyttäjän tehtäväksi tarkoitettuja ylläpitotoimia, jotka voidaan suorittaa ilman erikoistyökaluja.

VARO !Mikäli kirjoittimen suojakotelo avataan, olet alttiina näkymättömälle lasersäteilylle laitteen ollessa toiminnassa. Älä katso säteeseen.

VARNING !Om laserprinterns skyddshölje öppnas då apparaten är i funktion, utsättas användaren för osynlig laserstrålning. Betrakta ej strålen.

Tiedot laitteessa käytettävän laserdiodin säteilyominaisuuksista:

Aallonpituus 770-795 nm
Teho 5 mW
Luokan 3B laser

Control Panel Layout

The LaserJet 5 control panel consists of a 16-character scrolling display panel and six keys, three of which have forward and backward scrolling functions. Figure B-2 shows the display panel.

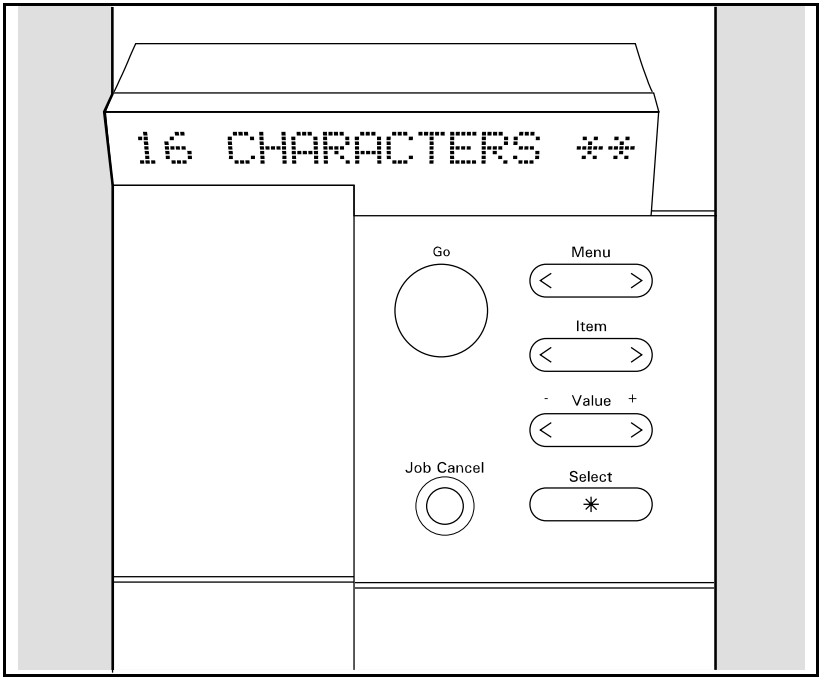

Figure B-2 Control Panel Keys

Control Panel Keys

The table on the following page explains how the control panel keys work.

Table B-8 Control Panel Keys

Key	Explanation
Go	The Go key replaces the On Line, Form Feed, and Continue keys from previous HP LaserJet printers. The Go key performs five main functions: Switches the state of communication between computer and printer either on (on line) or off (off line). Prints any data remaining in printer's buffer. Does *not* send a blank sheet of paper through the printer. Allows the printer to resume printing after a printer message (such as 20 MEM OVERFLOW) has placed it off line. Clears most printer messages and places the printer back on line. Overrides paper or envelope size selection regardless of size of media in Tray 1, optional Envelope Feeder, Tray 2, or Tray 3. Overrides a request to manually feed paper or an envelope by selecting paper from the next available source instead.
Job Cancel	The Job Cancel key performs one function — deleting a print job from the printer: Press Job Cancel to cancel a job that the printer is currently processing. The printer will display CANCELING JOB, clear the printer buffer, and return to a READY state. If Job Cancel is accidentally pushed, the job must be reprinted. There is no undo function. If Job Cancel is pushed when the printer is isle, NO JOB TO CANCEL will appear briefly, and then a READY display will reappear.
Menu	Press Menu to cycle through the control panel menus. Press the > end of the key to move forward through the menus. Press the < end of the key to move backward through the menus. When an option is added to the printer (PostScript, for example), a menu for that option appears in the sequence. See "Control Panel Menus," in this chapter, for more information.

Key	Explanation
Item	Press Item to cycle through the selected menu's items. Press the > end of the key to move forward through the items. Press the < end of the key to move backward through the items. Menu items vary depending on options installed and configuration of other menu choices.
- Value +	Press - Value + to cycle through the selected item's values. Press the > end of the key to move forward through the values. Press the < end of the key to move backward through the values.
Select	The Select key saves a control panel setting you selected. An asterisk (*) appears next to the saved selection, indicating that it is the default. Default settings remain in place when the printer is switched off or reset. The Select key is also used when printing a test page or configuration page from the control panel.

Control Panel Menus

Figure B-3 shows the menus and menu items available with the basic printer configuration. Not all menu items are discussed in this section. Only those items of specific interest from a service standpoint, or items new to the printers are discussed in this section. If options such as PostScript or a different I/O are installed, the new menu items automatically are added at the appropriate location. For example, a PostScript Menu appears following the PCL Menu.

To change a control panel setting:

1 Press **Menu** repeatedly until the menu you want appears.
2 Press **Item** repeatedly until the item you want appears.
3 Press **-Value+** until the setting you want appears.
4 Press **Select** to save your selection.

Note An asterisk appears next to your selection in the display, indicating that it is now the default.

5 Press **Go** to exit the menu.

Table B-9 Control Panel Menu for the HP LaserJet 5 (Refer to Figure B-3)

Reference	Explanation
1	Printing Menu: Lists the current printing and PowerSave settings.
2	PCL Fonts Menu: Lists current font settings.
3	Postscript Menu: List current postscript settings.
4	Job Menu: Lists current settings for print resolution, personality, and I/O timeout.
5	Config Menu: List current internal configuration settings of the printer.
6	Mem. Config. Menu: Lists I/O buffer and resource saving buffer settings.
7	Parallel Menu: Lists current settings of the parallel port.
8	Serial Menu: Lists current settings of the serial port.
9	HP MIO Menu: Lists current settings of the MIO card.
10	Reset Menu: Lists reset options available.
11	Test Menu: Lists internal tests available.

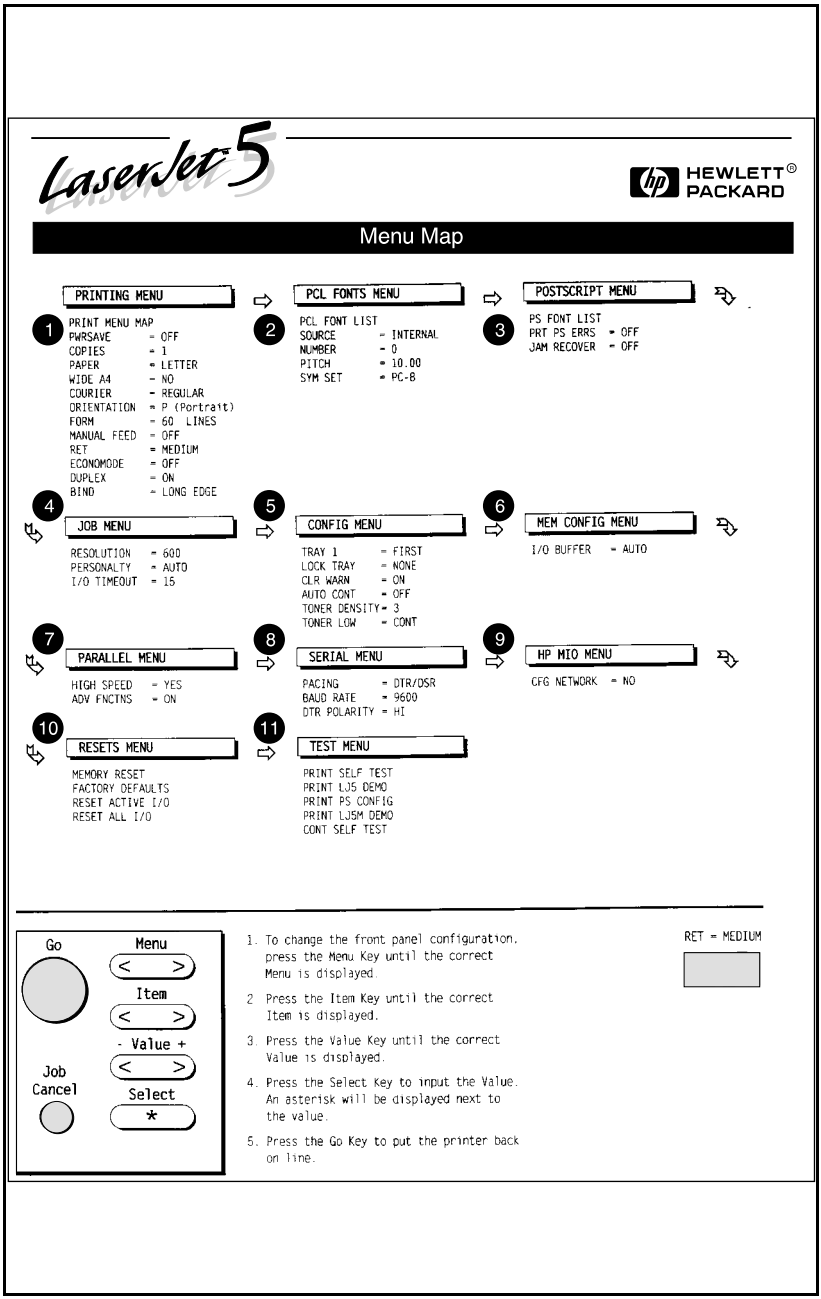

Figure B-3 Control Panel Menu Map

Printing Menu

TableB-10

Printing Menu Items

Item	Options	Explanation
PRINT MENU MAP	No options available	When PRINT MENU MAP is displayed, press Select to print a configuration page and a menu map. The message PRINTING CONFIGURATION PAGE is displayed.
PWRSAVE	OFF, 15 MIN, 30 MIN*, 1 HR, 2 HRS, 3 HRS	PWRSAVE stands for PowerSave. This menu item sets the amount of time you want the printer to be idle before the printer cools down. The printer automatically starts warming to printing temperature when a job is sent to the printer, a control panel key is pressed, paper is loaded or removed, or the top door is opened.
COPIES	1* to 999	Select any number from 1 to 999. Press - Value + once to change setting by increments of 1 or hold down to scroll by increments of 10.
PAPER ENVELOPE	LETTER* (110V printers), A4* (220V printers), Executive, Legal, A5 (from Tray 1 only) COM 10* (110V printers) DL* (220V printers) Monarch, C5, B5	The default image size for paper or envelopes can be set with the control panel.
WIDE A4	NO* YES	Changes the number of characters that may be printed on a single line of A4 paper. For example, when set to NO, 78 10-pitch characters will be printed on one line. When set to YES, 80 10-pitch characters will be printed.
COURIER	REGULAR* DARK	When set to REGULAR, the internal courier font is the same font used in the LaserJet series 4 printers. When set to DARK, the internal courier font is the same as the LaserJet series 3 printers. Both fonts are not available at the same time.

* Indicates factory default.

Item	Options	Explanation
ORIENTATION	P* L	P stands for portrait (vertical) and L stands for landscape (horizontal) orientation of type on the page.
FORM (5 TO 128 LINES)	60* (110V printers) 64* (220V printers)	Sets vertical spacing, from 5 to 128 lines, for default paper size. Press - Value + once to change setting by increments of 1 or hold down to scroll by increments of 10.
MANUAL FEED	OFF* ON	Available only through Tray 1. When Manual Feed is on and Tray 1 is empty, the printer goes off line when it receives a print job and displays MANUALLY FEED *media size*.
RET	OFF LIGHT MEDIUM* DARK	Refines the print quality.
ECONOMODE	OFF* ON	Reduces the amount of toner on the printer page when to set to ON.
DUPLEX	OFF* ON	Determines whether printer prints on both sides (duplex ON) or one side (duplex OFF) of a sheet.
BIND	LONG EDGE* SHORT EDGE	Determines orientation of print on the page when using a duplex unit.

* Indicates factory default.

Shading denotes optional items.

PCL Fonts Menu

Table B-11 PCL Fonts Menu Items

Item	Options	Explanation
PCL FONT LIST	No options available	Press **Select** to print a list of the PCL fonts.
SOURCE	INTERNAL* SOFT SLOT *N*	Internal fonts* Permanent soft fonts SIMM Module: n=slot number. Typefaces stored in one of the four ROM SIMM slots (SLOT=slot 1, for example).
FONT NUMBER	0 to 999	The printer assigns a number to each typeface and lists them on the PCL Font List, which you can print out. (See top row in table for how to print a PCL Font List.) The font number appears in the Font # column of the printout. Defaults and other conditions are as follows: Internal * 0* is the default Soft 1* is the default. You can select from the control panel only a permanent soft font that is currently in the printer. Do not use the ID number of a downloaded soft font. SLOT SIMM Module; n=SIMM slot (1-4). Typefaces stored in one of the four ROM SIMM slots (M1=FONT 1, for example).
PITCH or PT. SIZE	Pitch: 10.00* Pt: 12.00*	Depends on the FONT SOURCE and FONT NUMBER you select. Press **- Value +** once to change setting by increments of .01 for pitch and .25 for point-size or hold down to scroll by increments of 1.
SYM SET	PC-8* Many others	A unique grouping of all the characters in a font.

* Indicates factory default.

PostScript Menu

Table B-12 PostScript Menu Items

Item	Options	Explanation
PS FONT LIST	No options available	Press Select to print a list of the fonts. While the list is being printed, the message PRINTING FONT LIST is displayed.
PRT PS ERRS	OFF* ON	PRT PS ERRS stands for PRINT POSTSCRIPT ERRORS. This setting allows PostScript error messages to be printed.
JAM RECOVER	OFF* ON	PostScript can be set to automatically reprint jammed pages after a paper jam is cleared.

* Indicates factory default.

Shading denotes optional items.

Job Menu

Table B-13 Job Menu Items

Item	Options	Explanation
RESOLUTION	300 600*	Sets the resolution.
PERSONALTY	AUTO* PCL POSTSCRIPT (optional)	Sets the printer language, or allows it to be automatically set (AUTO) based upon PJL command or format of received data.
PAGEPROTCT	AUTO* ON	Only seen after a 21 PAGE TOO COMPLEX, PRESS GO KEY error. Can be set to ON to eliminate errors.
IO TIMEOUT	15* (5 to 300)	Time, measured in seconds, that the printer waits before ending a print job. Press - Value + once to change setting by increments of 1 or hold down to scroll by increments of 10.

* Indicates factory default.

Configuration Menu

Table B-14 Configuration Menu Items

Item	Options	Explanation
TRAY 1	FIRST* CASSETTE	When set to FIRST, Tray 1 is configured as the default tray and will be used first during printing if any media is loaded into the tray. TRAY 1=FIRST is not recommended for networked (shared) environments. When set to CASSETTE, Tray 1 no longer operates as a universal tray. A paper size must be assigned to Tray 1 using the SIZE 1 option (the next item in the Configuration Menu when TRAY 1=CASSETTE.) This allows Tray 1 to be used as a reserved tray. When Tray 1 is set as a cassette, Tray 2 becomes the new default paper source.
SIZE 1	LETTER* (110V printers) A4* (220V printers) Executive Legal A5 COM10 DL Monarch C5 B5	This menu item only appears if TRAY 1 priority has been changed from the default FIRST setting to CASSETTE. This item is used to tell the printer what size media is loaded in Tray 1 (since it has no paper size sensing mechanism).
LOCK	NONE* 1 (Tray 1) 2 (Tray 2) 3 (Tray 3) Envelope Feeders (Combinations of the above)	NONE No trays locked out 1 Tray 1 is locked out. 2 Tray 2 is locked out. 3 Tray 3 is locked out. 2, 1 Only Tray 3 is available 3, 1 Only Tray 2 is available. 3, 2 Only Tray 1 is available.
ENV FEED	COM 10* DL Monarch C5 B5	Only appears if the optional envelope feeder is installed in the printer. Used to designate the envelope size.
CLR WARN	ON* JOB	Determines how long a clearable warning will be displayed on the control panel. When set to ON, the warning is displayed until the Go key is pushed. If set to JOB, the warning will be displayed until the end of the print job in which it was generated.

* Indicates factory default.

Item	Options	Explanation
AUTO CONT	OFF* ON	Determines how the printer reacts to data errors and printer errors. When auto continue is set to OFF, the printer displays an error message and goes off line until you press Go. When auto continue is set to ON, the printer displays a message and goes off line for about 10 seconds, then comes back on line. If your printer is part of a network or remote spooling system, set auto continue to ON.
TONER DENSITY	1 2 3* 4 5	Determines the relative darkness of print on the paper; 1 being the lightest and 5 being the darkest.
LOW TONER	CONT* STOP	If TONER LOW is set to CONT, the printer will remain on line and continue to print while the message is displayed. If TONER LOW is set to STOP, the printer will go off line and wait for further action.

* Indicates factory default.

Memory Configuration Menu

Table B-15 Memory Configuration Menu Items

Item	Options	Explanation
I/O BUFFER	AUTO* OFF ON	Memory set aside for I/O buffering is automatically determined by the printer. No memory is set aside for I/O buffers. Size can be manually adjusted.
I/O SIZE	10K and up	When IO BUFFER is set to ON, this item appears in the menu. Press - Value + to add or reduce I/O buffer memory in increments of 0 KBytes up to 100 KBytes, then in 100 KByte increments.
RESRCSAVE	 AUTO* OFF ON	Appears when a certain amount of memory and a personality SIMM are installed in the printer. Enables or disables Resource Saving. Printer automatically determines the amount of memory to allocate to each installed personality. No memory is allocated. Additional memory management item selections appear.
PCL MEM PS MEM	0K and up	Increases memory for each installed personality.

* Indicates factory default.

Parallel Menu

Table B-16 Parallel Menu Items

Item	Options	Explanation
HIGH SPEED		The speed at which data is transmitted to the printer. If the default value (YES) results in I/O errors or no communications, set this value to NO.
	YES*	Sets the parallel interface to run at a higher data rate
	NO	Sets the parallel interface to run at a slower speed.
ADV FNCTNS	ON* OFF	ADV FNCTNS=ON enables bi-directional parallel communication, which allows your printer to send status readback messages to your computer. Setting advance functions to ON may slow personality switching.

* Indicates factory default.

Serial Menu

Table B-17 Serial Menu Items

Item	Options	Explanation
PACING	DTR/DSR*,	If the computer requires hardware flow control.
	XON/XOFF	If the computer requires software flow control.
BAUD RATE	9600* 300 to 57600	Tells the printer how fast information will be transferred from the computer to the printer.
ROBUST XON	ON*	Appears only when PACING is set to XON/XOFF. If it is set to ON, the printer sends an XON every one second until data is received when the printer is on line and when sufficient buffer space has become available.
	OFF	If it is set to OFF, the printer sends one XON when it can accept more data or when it is on line.
DTR POLARITY	HI* LO	Determines whether pin 8 goes high or low to indicate the printer is ready to receive data.

* Indicates factory default.

Resets Menu

Table B-18 Resets Menu Items

Menu Selection	Printer Response	Explanation
MEMORY RESET	CLEARING MEMORY	Press **Select** to perform a MEMORY RESET. This will clear the printer buffer and return all printing environment parameters to those values set in the Control Panel menus.
FACTORY DEFAULT	FACTORY DEFAULTS BEING RESTORED	Press **Select** to perform FACTORY DEFAULT. This restores most of the printer's *factory default settings* and performs a memeory reset. Items in the Config, Memory Configuration, Parallel, and Serial Menus are not reset.

Note The control panel resets will clear all memory in the printer, while the Job Cancel feature only clears the current job.

Test Menu

Table B-19 Test Menu Items

Item	Explanation
PRINT SELF TEST	When PRINT SELF TEST is displayed, press Select to print a self test.
PRINT LJ5 DEMO	Prints a page that illustrates the LJ5 printer features.
PRINT CONFIG	Prints a PostScript configuration page.
PRINT LJ5M DEMO	Prints a page that illustrates the LJ5M printer features.
CONT SELF TEST	Prints a series of PCL Configuration Pages. The display will continue to scroll the message CONTINUOUS TEST, PRESS JOB CANCEL KEY until Job Cancel is pressed.

Service Mode

The Service Mode should be used only by authorized service personnel. The following can be executed while in the Service Mode:

- Print a Service Mode Self Test.
- Verify the Page Count, (the page count also is displayed on the standard self test).
- Set the Page Count.
- Set the Cold Reset Default (This sets the factory default paper size. Use when replacing non-U.S. Formatters).
- Set the Diagnostic Functions *ON* or *OFF* (for software developers use only).
- Demo Page=On/Off. Removes the Demo Page option from the self test menu.
- BIG Data=On/Off. Setting BIG Data to ON increases the size of the printer's status Readback Buffer.

Service Mode has messages only in English. However, certain messages (i.e. "PCL CONFIG PAGE") that are used in user-mode and in service-mode, are displayed in the selected display language while in Service Mode.

The following procedure is used to initiate the Service Mode.

1. Hold down the **Menu+** and **Value+** keys while powering ON the printer. Hold the keys down until `SERVICE MODE` is displayed.
2. The interrupted power-on self test is resumed. If the test completes successfully, the message `SERVICE MODE` is displayed.

To exit Service Mode, press the **Go** key.

* Indicates factory default.

Setting the Page Count

The page count is stored in the printer's Non-Volatile Memory (NVRAM). If it is necessary to replace the Formatter PCA, the page count should be reset to the printer's original page count to reflect the age of the print engine. Use the following procedure to set the page count:

1. Enter the Service Mode as described previously.
2. When `SERVICE MODE` is displayed, press the **Menu+** key to access the Service Menu. Press the **Item+** key to step through the menu.
3. `PAGES=XXXXXX` is displayed. XXXXXX represents the page count currently stored in the printer's NVRAM. The underlined character denotes the cursor position.
4. Press the **Value+** or **Value-** key to change the value of the selected digit. Holding down the key scrolls through the values for the digit at approximately 5 values per second.
5. Press the **Select** key to select the correct value. The cursor automatically advances to the next digit.
6. Set each digit in the same manner. When the last digit's value has been entered, the printer automatically returns to `SERVICE MODE.`
7. Press the **Go** key one more time to exit Service Mode.

Setting the Cold Reset Default

A Cold Reset procedure returns most user-selectable Control Panel Menu selections to their factory defaults, including Paper Size and Tray 1 Size settings. All 220/240 printers are set from the factory to default to A4 paper size settings when the user performs either a Cold Reset or Factory Default Reset procedure. However, when a Formatter is replaced after leaving the factory (due to a need for service), a Cold Reset or Factory Default Reset will result in apaper size of Letter for the default paper size.

To reset the default Cold Reset (and Factory Default Reset) paper size value to A4:

1 Enter the Service Mode as described previously.
2 Press the **Menu** key to display `SERVICE MENU`.
3 Press the **Item** key to display `CR PAPER=LETTER`
4 Press the **Value+/-** key to toggle between Letter and A4 paper.
5 Press the **Select** key to save your selection.
6 Press **Go** to exit the Service Mode.

For more information regarding the Cold Reset procedure, refer to Chapter 3 of this manual.

Skip Demo

If set to TRUE, will disable any test and demo pages containing the HP logo. This setting should only be used by OEMs not wishing to give user-access to these pages.

Big Data

This item will allow a user to increase the amount of status readback buffer if the item is set to ON. The default for this item is OFF. The printer must be power-cycled after changing this value in order for the new buffer size to take effect.

Diagnostics

Allows a diagnostic mode for firmware developers. Should always be set to OFF (default value).

Programming a Flash SIMM

A flash SIMM may be programmed while installed in the printer. To program a flash SIMM.

1 Hold down the **Menu>** , **Item<** , **Value+** , and **Select** keys while powering on the printer.
2 The printer will display "PROGRAM SLOT 4". To change the slot number, press **Value+/-**.
3 Once the desired slot number is displayed, press **Select**.
4 The printer will display "OK", followed by "ERASING SIMM." If the SIMM is correcly earased, the printer will display "START DOWNLOAD." At this point, you may send the binary file to be flashed to the printer.
5 The 16 characters on the VFD will flash until the download is completed. When the download is completed, power cycle the printer.

Changing the Control Panel Display Language

The default control panel display language is set for English. Supported languages are: English, French, German, Italian, Spanish, Finnish, Danish, Dutch, Swedish, Norwegian, Turkish, Polish, and Portuguese. Follow these instructions to change the display language.

1. Switch OFF the printer.
2. Press and hold **Select** while switching the printer ON until `SELECT LANGUAGE` appears in the display.
3. After the power-on self test, `LANG=ENGLISH` appears. Press **Value+/-** until the desired language appears in the display.
4. Press **Select** to save your choice. An asterisk (*)appears next to the language to indicate it is now the default.
5. Press **Go**. The On Line indicator is lit, and display messages are now in the language you selected.

Note If the display language is changed, replace or install the Control Panel Overlay to match the selected language. See the index to Chapter 6 for instructions on changing or installing the Control Panel Overlay and Chapter 8 for applicable part numbers.

NVRAM Init

NVRAM Init clears the NVRAM to its initial state. This reset is used when the NVRAM becomes full and the user would like to add additional personalities. It is possible to reconfigure the NVRAM so the new personalities have higher priority and the older personalities, while they can still be run with factory defaults, run without NVRAM. This is done by clearing the NVRAM and then adding the new personalities before adding the older personalities.

To perform a NVRAM init, hold down the JOB CANCEL key while power cycling the printer. The English message, “NVRAM INIT” will be displayed briefly and the NVRAM will be initialized before the rest of the system comes up. Once the power-on self test is finished, the message “RESTORING FACTORY SETTINGS” will scroll.

Note The NVRAM init set the page count back to zero and all other SERVICE MODE settings to defaults, so it is necessary to reconfigure after performing this initialization. It also sets the Tray 1 size to Letter, the envelope feeder to COM10, and the display language to English.

Understanding the PCL Self Test Printout

Table B-20 Self Test Printout Items for the HP LaserJet 5

Reference	Explanation (Refer to Figure B-4)
1	Printer Information lists printer specific statistics. Formatter Number shows the unique number assigned to the formatter board. Firmware Datecode is the eight-digit date (YYYYMMDD) code of the Formatter ROM. Page Count shows the number of pages the printer has printed.
2	Installed Personalities and Options lists printer languages and all SIMM accessories that are installed.
3	Security lists whether the control panel is locked and whether the control panel has a security password.
4	Memory shows the total amount of installed memory, and indicates the amount of available memory for PCL applications (such as font downloading software). Information about the current I/O Buffering and Resource Saving configuration appears here. If the printer does not have enough memory installed to enable these two features, the amount of additional memory needed appears.
5	Paper Handling Options list the installed paper handling accessories. These accessories may include the Duplex Unit, Envelope Feeder, and the 500 sheet Lower Cassette (Tray 3).
6	HP MIO information is reserved for the HP MIO and network statistics. For some installed MIO options, this block of information can be as long as 20 lines and three columns.

LaserJet 5

HEWLETT® PACKARD

Self Test / Configuration

1 Printer Information

Formatter Number: S4601LXXXXX
Firmware Datecode: 19951225
Page Count: 4979

2 Installed Personalities and Options

PCL (19951225)
PCLXL (19951225)
POSTSCRIPT (19951121) *
* Adobe, PostScript, and the PostScript Logo are trademarks of Adobe Systems Incorporated which may be registered in certain jurisdictions
SIMM Slot 1: 1 MByte RAM SIMM
SIMM Slot 2: 1 MByte RAM SIMM
SIMM Slot 3: 4 MByte ROM SIMM
SIMM Slot 4: 4 MByte ROM SIMM
SIR Pod (IRDA compliant)
Total Packets Transmitted: 17
Total Packets Received: 24
Retransmissions: 0
Bad Packets Received: 0

3 Security

Control Panel Lock: DISABLED
Control Panel Password: DISABLED

4 Memory

Total Memory: 4 MBytes
PCL DWS: 2.86
I/O Buffering:
10K bytes Allocated of 100K bytes Available
Resource Saving:
Additional Memory Needed to Enable: 9 MBytes

5 Paper Trays and Options

Default Paper Size: LETTER
Tray 2 (LETTER)
Tray 3 (LETTER)
Duplex Unit

6 HP MIO

```
HP ETHERNET MULTI-ENVIRONMENT
FIRMWARE REVISION:      A.03.03
LAN HW ADDRESS:   08000977B94F
PORT SELECT:          10BASE-T
NETWORK MODE:   MULTI-PROTOCOL
=============================
I/O CARD READY

NETWORK STATISTICS
UNICAST PACKETS RCVD:   968170
TOTAL PACKETS RCVD:   118199936
BAD PACKETS RCVD:      17107750
FRAMING ERRORS RCVD:         46
PACKETS TRANSMITTED:   1438395
UNSENDABLE PACKETS:           2
XMIT COLLISIONS:              2
XMIT LATE COLLISIONS:         0
```

```
NOVELL STATUS:              READY

MODE:             QUEUE SERVER
NODE NAME:
  PROD_MKTG_5M
SERVER NAME:  MARKETING_2

NOVELL RETRANS:             7833
NETWORK  FRAME TYPE         RCVD
0F2767C8 EN_802.3       45903927
46FE0022 EN_802.2       25262080
UNKNOWN  EN_SNAP            6498
=============================
APPLETALK STATUS:           READY
ETALK NET:   393 NODE: 136  P2
LTALK NET:     0 NODE: 200
APPLETALK NAME:  LaserJet 58

ETALK ZONE:  BSO_Office2_Defau
lt
```

```
TCP/IP STATUS:              READY

HOST NAME:                 jd1680
CONFIG BY:            BOOTP/TFTP
IP ADDRESS:         15.39.96.64
SUBNET MASK:      255.255.248.0
DEF. GATEWAY:        15.39.96.1
SYSLOG SERVER:     15.39.97.184
IDLE TIMEOUT (SECONDS):      90
SNMP GET CMTY NAME:         ALL
SNMP SET CMTY NAME:        NONE
BOOTP SERVER:      15.39.97.184
CONFIG FILE:  hpnp/jd1680.cfg

=============================
DLC/LLC STATUS:             READY
```

Figure B-4 HP LaserJet 5 PCL Self Test Printout

Infrared Communication

The HP LaserJet 5, 5M, and 5N printers are equipped with an Infrared Datalink Association (IrDA) compliant port. The IrDA specification allows “wireless” transmission of print data between a wide variety of hosts (primary) and peripheral (secondary) devices. A primary device — such as a PC or laptop computer — is capable of reading and writing data to another primary device or writing to a secondary device, such as a printer. Secondary devices are read-only; they cannot initiate their own communication, and can only respond to a host command when properly addressed.

The IrDA protocol uses a transceiver chip in both devices to send and receive data packets. The packets are checked for validity, and a response is sent by the secondary device indicating whether the packets were complete or in error.

The IrDA protocol is contained in three layers:

- The physical electronics are the hardware elements in each device for sending and receiving the data.
- The Link Access Protocol (LAP) layer controls the physical layer, packetizes/unpacketizes data, and sets transmission rates.
- The Link Management Protocol (LMP) layer routes data to and from the host operating system (DOS/Windows).

The data flow is shown in Figure B-5.

The LAP and LMP layers can reside in either firmware, software, or a combination of both. There are different LAP and LMP protocols for primary and secondary devices.

The HP LaserJet 5 printer has the complete secondary protocol, and any host trying to communicate via the infrared (IR) port must have the complete primary protocol installed. The primary protocol software is the responsibility of the host supplier. It is not provided by Hewlett-Packard with the printer.

IrDA host (or primary device) communications can be obtained either via an internal IR port or an external IR accessory. Several manufacturers offer complete accessory upgrades for both host and peripheral devices.

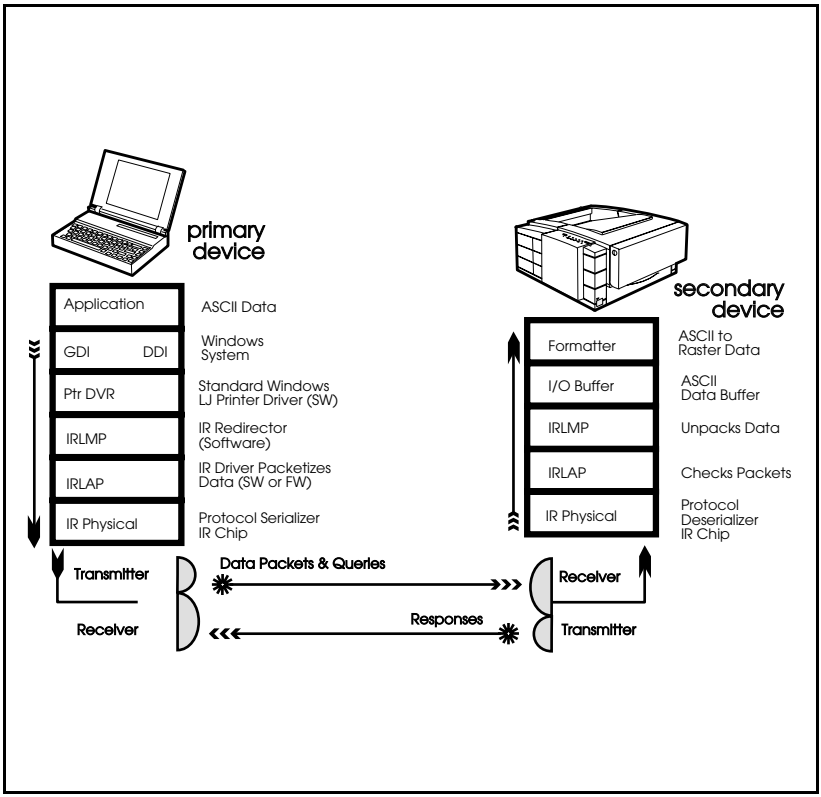

Figure B-5 IR Data Flow

System Requirements

- Hardware
- Both the primary and secondary devices must be equipped with an IrDA-compliant IR component. Older, non-IrDA-compliant devices may not be compatible with the HP LaserJet 5/5M/5N printers.
- Software
- The primary device must be loaded during boot-up with software provided by the manufacturer for infrared operation.
- The primary device must be properly configured with an infrared COM port, IRQ level, and base address value.
- The infrared port must be installed and selected in the Printers section of the Windows Control Panel.
- The SIR transceiver pod (C2929A) accessory must be purchased for the LaserJet 5, 5M, or 5N printer.

To Print Using the Infrared Port

The C2929A Infrared Transceiver must be plugged into the infrared (IR) port on your HP LaserJet 5, 5M, or 5N printer, located at the rear of the printer (Figure B-6). This port is compliant with the specifications determined by the Infrared Data Association (IrDA). On top of the transceiver pod is a status light that indicates when the port is activated. To use the IR port, you need to use a portable device that also includes an IrDA-compliant IR port and be within the range of operation (see Figure B-7).

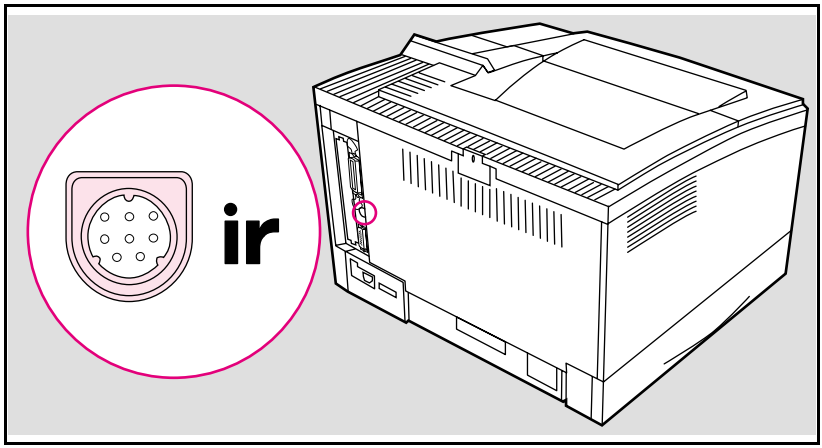

Figure B-6 IrDA Port Location

The IR port is compatible with a wide variety of IrDA-compliant portable devices; however, the method for printing will vary depending on the type of device and the operating system in use. Refer to the instruction manual for your portable equipment for specific instructions on printing from that device.

The IR port works by receiving data similarly to a serial port, however, without a cable and operates at speeds of up to 115 k bits per second. When the IR connection is established, the status light comes on. If the connection is broken or when the print job is complete, the status light goes off.

1 Make sure the printer is in Ready Mode.
2 Align your laptop computer (or other portable equipment) that is equipped with an IrDA-compliant IR port within 3 feet (1 m) of the IR pod and at an angle of plus or minus 15 degrees to ensure printing (Figure B-5).

3 Send the print job. The status light on top of the IR pod turns on. (Printing a complex document or using a software print spooler on your PC may delay the time it takes for the IR status light to turn on.) If the status light does not turn on, realign the port on your portable equipment with the pod, resend the print job and stay within the range of operation during printing.

4 If you have to move the device, for example, to add paper, make sure you stay within the range of operation to maintain the connection. If the connection is interrupted before your print job is complete, the IR port status light will turn off. You have from 3 to 40 seconds (depending on the host implementation) to correct the interruption and continue the job. In this case, the IR port status light turns back on.

5 The connection can be permanently broken (interrupted for more than 3 to 40 seconds) if the “sending” IR port is moved out of the range of operation or if anything passes between the two ports to block the transmission, such as a hand or piece of paper, or even direct sunlight. In this case, the job needs to be reprinted.

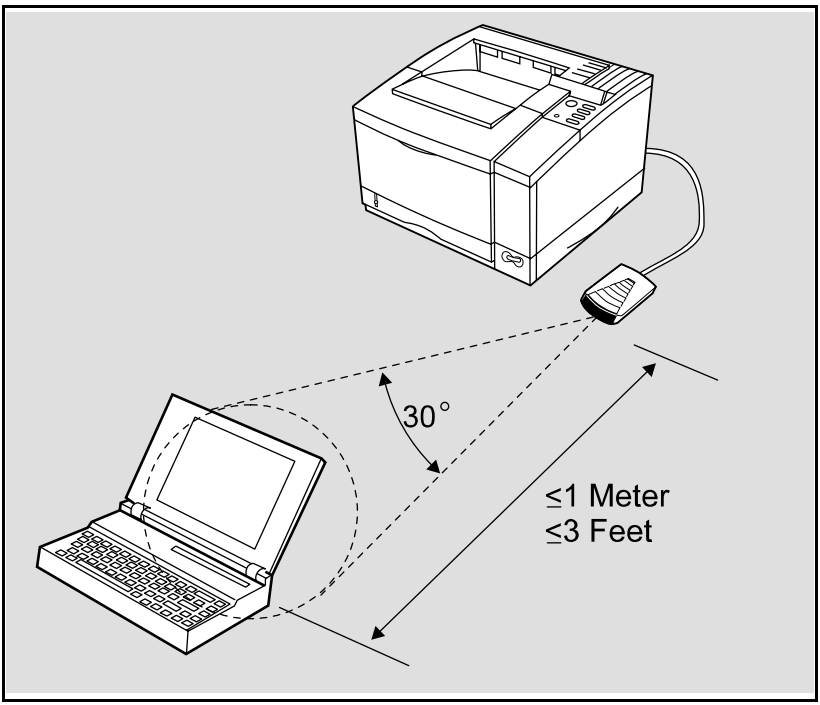

Figure B-7 IrDa Port Ranges

If you still have problems printing, make sure you are using an IrDA-compliant device and proper software and have selected the proper port for printing.

Note The IrDA standard for infrared communications represents an emerging technology. Older non-IrDA-compliant portable devices may not be compatible with your HP LaserJet 5/5M/5N printer. If you continue to have problems printing using the IR port, contact the manufacturer or dealer where you purchased your portable device to verify compatibility with the IrDA standard, and follow the troubleshooting procedure immediately following.

Troubleshooting IR Printing Problems

IR printing problems may be caused by any of the several system components or by lack of proper configuration. The following checklist will help determine the source of the problem.

1. Verify the user is operating the printer and PC as described in the User's Manual: less than one meter between devices, and not more than plus or minus 15 degrees from direct center.
2. Verify the host PC or laptop and the printer are IrDA-compliant and have the necessary hardware components for IR communication.
3. Verify the IR software has been loaded on the primary device. (This is system software and should be available from the PC manufacturer.)
4. Verify the host PC or laptop is properly configured. Check the port assignment, the IRQ level, and the base address value. Check both the DOS AUTOEXEC.BAT and CONFIG.SYS files, and the Windows system configuration.

If all these elements are properly installed and configured, use the IR test tool to test the IrDA protocol transmission and device operation. This tool for troubleshooting IR communication problems, shown in Figure 10, has been developed by Genoa Technology, Inc., in cooperation with Hewlett-Packard. The part number is 5062-4661 and can be ordered through HP Parts Direct Ordering.

The IR test tool can be used with any IrDA-compliant primary or secondary device, regardless of manufacturer.

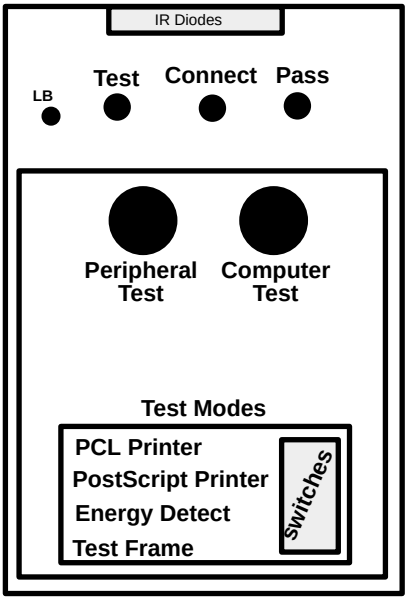

Figure B-8 Infrared Test Tool

To test the peripheral device:

1. Put the HP LaserJet 5 in Ready Mode.
2. Press the “Peripheral Test” button on the test tool. The LEDs on the test tool will sequence.

If the “PASS” LED lights, the test was successful, indicating that communication with the printer’s IR port is functioning normally.

On HP Laser-Jet printers, a self-test page will be initiated by the test.

If the “TEST” LED goes out and the “PASS” LED fails to light, the printer’s IR port is not functioning correctly; check the operator’s instructions included with the IR test tool.

To test the host computer:

1. Place the test tool on a table in front of the PC’s IR port.
2. Press the “computer Test button. The test tool will sequence the LEDs.

If the “PASS” LED light, the test was successful, indicating that communication with the printer’s IR port is functioning normally.

If the “TEST” LED goes out and the “PASS” LED fails to light, the host’s IR port is not functioning correctly.

Infrared Port Not Responding

Table B-21 Solutions for Infrared Not Responding

Situation	Solution
The connection cannot be established or the transmission seems to be taking longer than usual.	Make sure the device you are using is IrDA-compliant; look for an IrDA symbol on the device or refer to the manual for the device for IrDA specifications. Make sure that the operating system on your computer includes an IR driver and your application uses a HP LaserJet 5/5M/5N compatible printer driver. Make sure you have positioned the device within the range of operation and that no objects, such as a finger, paper, books, or bright light, are interfering with the connection. Also make sure the two IR ports are clean (free from dirt and grease.) Bright light of any kind (sunlight, incandescent light, fluorescent light, or light from an infrared remote control, such as those used for TVs and VCRs) shining directly into one of the IR ports may cause interference. Position the device closer to the printer's IR pod.

Situation	Solution
The printer prints only part of a page or document.	The connection has been broken during transmission. If you move the portable device during transmission, the connection can be broken. IrDA-compliant devices are designed to recover from temporary connection interruptions. Re-establish the connection (depending on the device you are using, you can have anywhere from 3 to 20 seconds to re-establish the connection)
The print job has been properly sent to the printer, but the printer will not print.	If the connection is broken before the entire print job has been transmitted to the printer (printing has not yet started), the printer may not print any of the job. If the Data light is on, press the **Job Cancel** button to clear the printer's memory. Then, position the device within the range of operation, and print the job again.
The IR status light turns off during transmission.	The connection may have been broken If the Data light is on, press the **Job Canel** button to clear the printer's memory. Then, position the device within the range of operation, and print the job again.

Index

!

12 PRINTER OPEN 7-18
13 PAPER JAM 7-20
14 NO EP CART 7-25
16 TONER LOW 4-10, 7-25
21 PRINT OVERRUN 3-53
41.1 ERROR 7-28
41.2 ERROR 7-28, 7-31
41.3 ERROR 7-28
41.4 ERROR 7-28
41.5 ERROR 7-28
50 service error 7-29
51 ERROR Message 7-31
52 ERROR 7-32
57 SERVICE 7-33
58 SERVICE fan failure 7-34

A

Accessory Parts 8-33
adjustment
    leading edge registration 1-35
advanced functions 3-33
ASAP (Automated Support Access Program) 1-12
ASCII PJL Escape Sequence 3-19
assemblies removal 6-15
Assist Line (HP CSC) 1-13
assistance, technical 1-12
AUDIO TIPS, HP 1-13
autoexec.bat 3-31, 7-53

B

background scatter 7-35, 7-47
basic sequence of operation 5-33
baud rate 3-33
beam detect signal weak (41.2) 7-27
big data B-28
black pages 7-35
    with horizontal stripes 7-35
blank display 7-12
button, test print 3-29

C

cable pinouts 3-35
CDRH laser safety 1-8
changing the display language 3-28
check
    MP tray empty sensor 7-17
    sw601 7-19
checkpoints, service 4-3
CIC (Customer Information Centers) 1-13
cleaning brush uses 4-16
cleaning station, drum 5-18
clearable warnings 7-10
CLEARING MEMORY 7-A
CLOSE PRINTER COVER 7-A
cold reset 3-23, B-27
communications checks 7-52, 7-54
component locations 7-59
CompuServe Forum, HP 1-13
conditioning station, drum 5-19
configuration
    AUTOEXEC.BAT 7-53
    communications check 7-52
    system 3-31
    test message 7-52
configuration menu B-19
contact plate, high voltage 6-62
contactor removal 6-62
CONTINUOUS TEST 7-A
control panel 3-2, 3-6, B-10
    flashing indicators 3-2
    overlay 3-28
    removal 6-23
    security 3-18
control panel keys B-11
covers removal 6-4
Customer Support Center
    Europe (ECSC) 1-14
    U.S. (CSC) 1-13
customization variable 3-22

D

data flow, serial 5-4
DATA RECEIVED 7-A
datecode 3-26
DB-25 3-37
    cable pinouts 3-37
DB-9 3-35
    cable pinouts 3-35
DC Controller 5-2
    installation 6-35
    loads 5-3
    removal 6-33
    system 5-1
DC power supply 5-2

defect Ruler 7-67
defect template 7-67
developing station, drum 5-22
DHHS laser safety 1-8
Diagnostics B-28
diagrams, timing 5-34
disassembly, fuser 6-47
display language, changing 3-28, B-30
distorted print 7-35, 7-42
documentation, related 1-7, B-8
DOS commands
    serial 7-53
DOS Utilities 3-42
Drum
    cleaning station 5-18
    conditioning station 5-19
    developing station 5-22
    photosensitive 5-17
    Rotation Check 7-50
    sensitivity 5-17
    transferring station 5-24
    writing station 5-20
dtr polarity 3-34
dtr/dsr 3-34
Duplex
    components A-14
    covers A-9
    electrical block diagram A-5
    installation A-6
    overview A-2
    printing A-3
    removal and replacement A-8

E

EconoMode 3-16, 4-6
ENGINE TEST 7-A
envelope feeder 5-4
    installation 3-49
envelopes 2-6
error
    infrared B-41
Error Map for LJ 5 7-A - 7-D
Error messages
    MP/PC/LC LOAD 7-13
    troubleshooting 7-2
ESD 6-1
European Customer Support Center (ECSC) 1-14
European formatter installation 3-22
exhaust fan motor 5-10
Explorer 3-33

F

FACTORY DEFAULTS 7-A
faint print 7-35
faint print 7-38
fan
    checks 7-34
    failure 7-34
    motor signals 5-10
    removal 6-39
faulty registration 7-39
fax information service (HP FIRST) 1-12
feed guide assembly 6-62
    replacing 6-68
Finland laser safety 1-10, B-9
firmware date code 3-26
flash SIMM B-29
flashing indicators 3-2
FM1 7-34
    exhaust fan motor 5-10
font door cover 6-10
formatter
    PCA removal 6-29
    pca, functional overview 5-12
    system 5-12
formatter cage removal 6-27
formatter system 5-1
functional check
    half self-test 7-49
    laser/scanner assembly 7-32
    lower cassette 7-24
    main motor 7-33
    PS2 7-17
functional overview, formatter 5-12
functional test, pickup motor (m2) 7-23
fuser assembly
    configuration 6-48
    life expectancy 4-2
    parts location 6-48
    PM 4-3
    removal 6-22
    thermoswitch removal 6-55
fuser bulb replacement 1-47
fuser disassembly 6-47
fuser malfunction 7-29
fusing
    process 5-25
    station 5-25
    temperature 5-2
fusing roller heat lamp removal 6-49

G

gear assembly removal 6-38

H

half self-test functional check 7-49
handshaking 3-34
hardware 6-2
    descriptions 6-3
heat lamp 6-49

high voltage
contact assembly 6-68
contact plate 6-62
contactor removal 6-62
contactor/paper guide removal 6-62
High Voltage Power Supply
assembly 7-51
checks 7-51
removal 6-21
troubleshooting 7-51
high voltage system 5-2
HP ASAP (Automated Support Access Program) 1-12
HP AUDIO TIPS 1-13
HP FIRST (Fax Information Retrieval Support Technology) 1-12

I

I/O
buffering 3-15
information 3-26
image
defect summary 7-35
formation system 5-1, 5-16
formation troubleshooting 7-49
skew 7-35
image skew 7-43
improperly sized image 7-35, 7-44
INCOMPATIBLE ENVELOPE FEEDER 7-A
INCOMPATIBLE TRAY 3 7-B
indicators 3-2
information, related 1-7, B-8
infrared
operation B-37
printing B-36
software B-34
status light B-36
test tool B-39
troubleshooting B-38, B-41
using to print B-36
infrared communication B-34
Infrared, test tool B-38
initial rotation period 5-38
INITIALIZING 7-B
input area paper jams 7-20
input feed roller, PM 4-3
Input/Registration Sensor Check 7-22
INSTALL TONE CARTRIDGE 7-B
INSTALL TRAY 2 7-B
installation
DC controller 6-35
installing
printer drivers 3-41
SIMM 3-51
the control panel overlay 3-28
the envelope feeder 3-49
the optional lower cassette 3-44
the toner cartridge 4-7
the transfer roller 4-16
INSUFFICIENT MEMORY 7-B
insufficient memory messages 7-10
interconnect PCA removal 6-69
interface troubleshooting 7-52
interfaces
DOS commands, parallel 3-31
parallel DOS commands 3-31
IrDA, print using B-36

J

J09, fan connector 7-34
J131 7-33
J211, main motor connector 7-33
J601 7-23
J602 7-23
J701 7-23
J702
location 5-5
paper control PCA 5-5
J704
location 5-5
paper control PCA 5-5
jam, detection, paper 5-11
job menu B-18

L

label, laser safety 1-8
labels
adhesive 2-5
arrangement 2-5
construction 2-5
curl 2-5
guidelines 2-5
language, changing the display 3-28
large print voids 7-35, 7-46
laser and scanner drive 5-2
laser safety
CDRH 1-8
DHHS 1-8
Finland 1-10, B-9
label 1-8
laser/scanner assembly functional checks 7-32
LaserJet Explorer 3-33
last rotation period 5-42
LC LOAD message 7-13
leading edge registration adjustment 6-35
left side cover removal 6-7
life expectancy
fuser assembly 4-2
rollers 4-2
separation pad 4-2
toner cartridge 4-2
LJ 5 Printer B-1 - B-42

lower cassette
assemblies removal 6-44
assembly 5-4
drive motor (M3) 5-10
functional check 7-24
installing 3-44
paper loading 3-45
pickup motor 7-24
pickup motor removal 6-45
sensor board removal 6-44
tray switches 5-9
LPT1 3-31

M

M1, main motor 5-10
M2 functional test 7-23
M2, paper feed motor 5-10
m3
lower cassette drive motor 5-10
lower cassette pickup motor 7-24
M4, envelope feeder drive motor 5-10
M5, scanner motor 5-11
machine status 5-2
Macintosh 3-18
main motor
(M1) 5-10
assembly removal 6-37
drive 5-2
drive system 5-10
failure 7-33
functional checks 7-33
functional tests 7-33
signals 5-10
maintenance 4-1
procedures 4-11
malfunction, fuser 7-29
MANUALLY FEED 7-B
measuring d.c. voltages 7-69
media specifications 2-3
memory 3-53
size 3-26
memory configuration menu B-21
Memory Enhancement technology (MEt) 3-17
MEMORY FULL 7-B
MEMORY LOW 7-B
MEMORY SETTINGS CHANGED 7-B
memory-induced messages 7-10
message, TONER LOW 4-10
microswitch
(SW603) 7-15
(SW604) 7-15
(SW605) 7-15
signals 5-8
MIO 3-26, 3-40, 7-56
menus 3-26
MODE command 3-31
MODE statement 7-53
model number 1-3, B-5
motor locations 7-61
MP Door Removal 6-12
MP pick-up roller clutch solenoid (SL2) 5-5
MP rollers, PM 4-3
MP tray
empty sensor check 7-17
paper end sensor functional test 7-44
paper path 5-29
paper pickup rollers removal 4-11
removal 6-13
separation pad removal 4-11
MP/PC/LC LOAD Message 7-13
MS-DOS
System configuration 3-31
version 4 and above 7-53
version 4 and below 7-53
MSDS, phone number 1-11
multifeed (41.3) 7-28

N

networks, security 3-18
noisy vertical sync signal (41.1) 7-28
non-HP toner cartridge 4-9
Novell Networks, HP JetAdmin Utility 3-19
number
model 1-3, B-5
Serial 1-3, B-5
NVRAM Init B-31

O

OFFLINE 7-B
operation
basic sequence of 5-33
standard printer 5-33
options, installed status 3-26
ordering
documentation 1-7, B-8
packaging material 3-43
output area paper jams 7-20
output assembly removal 6-41
overhead transparencies 2-6
ozone, safety 1-11

P

pacing 3-34
packaging material part no. 3-43
packaging the printer 3-43
page count 3-24, 3-26
setting the 3-21
page protect 3-13
paper control pca removal 6-59
paper exit sensor removal 6-42

paper feed
assembly removal 6-18
paper feed guide removal 6-62
paper feed system 5-1, 5-26
paper jam 7-20
detection 5-11
PS1 7-20
troubleshooting 7-20
paper motion 5-2
paper path
MP tray 5-29
PC tray 5-30
paper pickup motor 5-10
paper pickup rollers 4-11
paper sensors 7-20
paper size sensing, lower cassette 7-16
paper specifications 2-3
paper tray switch settings 5-9
paper, loading optional lower cassette 3-45
parallel
communication 3-31
DOS commands 7-53
parallel menu 3-33, B-22
parts list 8-40
PC LOAD Message 7-13
PC pick-up roller clutch solenoid (SL1) 5-5
PC rollers, PM 4-3
PC tray
paper path 5-30
pickup roller removal 4-13
PC tray size switches (SW603, SW604, SW605) functional check 7-15
PCL fonts menu B-17
PCL memory requirements 3-26
period
initial rotation 5-38
last rotation 5-42
print 5-40
standby 5-37
warm-up 5-37
periodic maintenance procedures 4-11
phone numbers
CIC (Customer Information Centers) 1-13
CSC (Customer Support Center) 1-13
MSDS 1-11
printer drivers 3-41
technical assistance 1-12
photosensitive drum 5-17
photosensors
signals 5-5 - 5-6
tray and door 5-5 - 5-6
pickup motor (m2) functional test 7-23
pickup motor, lower cassette 7-24
pickup rollers 6-1
PLEASE WAIT 7-B
port
infrared B-35
PostScript 3-58
postscript menu B-18
power supply removal 6-15
power system 5-1, 5-31
POWERSAVE ON 7-B
pre-troubleshooting procedures 7-1
preliminary operating checks 7-1
print darkness 3-17
print density 7-38
adjusting 3-17
adjustment 4-5
dial 3-17
print media specifications 2-3
print period 5-40
printer
security 3-18
serial number 1-3, B-5
specifications 1-5, B-6
printer drivers 1-13, 3-41
obtaining 3-41
Printer Job Language (PJL) overview 5-15
printer message troubleshooting 7-2
printer open failure 7-18
PRINTING CONFIG PAGE 7-B
PRINTING DEMO PAGE 7-B
printing envelopes 2-6
PRINTING FLASH PAGE 7-B
PRINTING FONT LIST 7-B
printing menu 3-24, B-15
printout, test print 3-29
process, fusing 5-25
PROCESSING JOB 7-B
product compatibility 1-2, B-2 - B-3
programming flash SIMM B-29
protecting the SIMM board 3-51
protocol
infrared B-34
PS 5, MP tray trailing edge sensor 7-44
PS1
and PS2 sensor assembly removal 6-61
input/registration sensor 5-7
paper jam 7-20
PS2
functional check 7-17
paper jam 7-20

PC tray paper-out sensor 5-6
PS3
(exit sensor) check 7-23
paper exit sensor 5-7
PS3 removal 6-42
PS4
check 7-17

PS5
check 7-44
MP tray trailing edge sensor 5-7
PS6, lower cassette paper-out sensor 5-7
PS7, envelope feeder paper-out sensor 5-7

R

RAM size 3-24
Random Horizontal Black Lines 7-40
READY 7-B
rear door removal 6-8
recycling program
Toner Cartridge 4-7
registration
adjustment 6-35
leading edge adjustment 6-35
related documentation 1-7, B-8
removal
font door cover 6-10
formatter pca 6-29
gear assembly 6-38
left side cover 6-7
MP tray separation 4-11
PC tray pickup roller 4-13
top cover 6-5
transfer roller 4-16
REMOVE DUPLEX JAM 7-B
REMOVE PAPER JAM 7-C
removing
and replacing the transfer roller 4-15
lower cassette roller 4-14
MP tray separation pad 4-11
MP tray, paper pickup rollers 4-11
PC tray pickup roller 4-13
the SIMMs cover 6-25
transfer roller 4-16
removing the covers 6-4
repackaging instructions 3-43
repetitive defect template 7-67
repetitive defects 7-35, 7-41
replacing
fuser parts 6-47
MP tray separation pad 4-11
paper pickup rollers 4-11
the feed guide assembly 6-68
the high voltage contact assembly 6-68
the transfer roller 4-16
REQUESTED LANGUAGE NOT AVAIL 7-C
requirements
for infrared B-35
requirements, site 2-1
Reset Menu 3-5
reset, cold 3-23
resets menu B-23
RESETTING ACTIVE I/O 7-C
RESETTING ALL I/O 7-C
Resolution Enhancement (REt) 3-16
Resolution Enhancement technology
status 3-26
Resource Saving 3-14
status 3-26
RESTORING FACTORY SETTINGS 7-C
returning the printer 3-43
RFI statement 1-9
right hand text missing 7-35, 7-40
right side cover removal 6-4
robust xon 3-34
rollers
life expectancy 4-2
MP tray 4-11
paper pickup 4-11
rs-422A 3-39
rs232C 3-33

S

safety
Finland laser 1-10, B-9
label, Laser 1-8
laser, CDRH 1-8
laser, DHHS 1-8
ozone 1-11
toner 1-11
scanner assembly removal 6-43
scanner malfunction 7-32
scanner motor 5-10
signals 5-10
security, networks 3-18
self test description 3-24, B-32
sensitivity, drum 5-17
sensor pca removal 6-60
separation pad 6-1
life expectancy 4-2
MP tray 4-11
sequence of operation, basic 5-33
serial
cable pinouts 3-35
communication 3-31
configuration 3-33
DOS commands 7-53
serial data
communication 5-4
flow 5-4
input (SLI) 5-2
output (SLO) 5-2, 5-4
repackaging instructions 3-43
repetitive defect template 7-67
repetitive defects 7-35, 7-41
replacing
fuser parts 6-47
serial menu B-22
serial number 1-3, B-5

service checkpoints 4-1, 4-3
Service Mode 3-20, B-25
service/error messages 3-59
setting the cold reset B-27
setting the page count 3-21, B-26
setting up the envelope feeder 3-50
settings, tray switch 5-9
sheet feeder installation 3-44
signals
    fan motor 5-10
    main motor 5-10
    Microswitch 5-8
    Photosensor 5-6
    scanner motor 5-10
    solenoid 5-5
site requirements 2-1
Skip demo B-28
SL1, PC pick-up roller clutch solenoid 5-5
SL2, MP pick-up roller clutch solenoid 5-5
SL3 lower cassette pickup roller clutch solenoid 5-5
SLI (serial data in) 5-4
SLO (serial data out) 5-4
smeared print/improper fusing 7-35, 7-42
software B-35
    shipped with printer B-34
solenoids 5-5
    signals 5-5
space requirements 2-2
specifications
    IrDA B-34
    labels 2-3, 2-5
    paper 2-3
    print media 2-3
standard printer operation 5-33
standby period 5-37
state machines 5-4
statement, RFI 1-9
station
    drum cleaning 5-18
    drum conditioning 5-19
    drum developing 5-22
    drum transferring 5-24
    drum writing 5-20
    fusing 5-25
Status message troubleshooting 7-2
status, self test 3-26
sw601 7-19
sw601, top cover open sensor switch 5-8
sw602, test print switch 5-8
SW603 7-15
    PC size switch 5-8
SW604 7-15
    PC size switch 5-8
SW605 7-15
    PC size switch 5-8
sw851, lower cassette size switch 5-8
sw852, lower cassette size switch 5-8
sw853, lower cassette size switch 5-8
switch locations 7-62
switch settings, paper tray 5-9
system
    communication 3-31
    configuration 3-31
    paper feed 5-26

T

TB201 (voltage test points) 7-69
technical assistance 1-12
test menu B-24
test message for communications check 7-52
test print button 3-29
test print printout 3-29
test tool
    infrared B-39
thermistor removal 6-56
thermoswitch removal 6-55
timing 5-2
timing diagrams 5-34
toner
    cleaning 1-11
    distribution 4-10
    level 5-2
    safety 1-11
toner cartridge 4-1, 4-5, 4-10
    components 7-26
    life 4-5
    life expectancy 4-2
    recycling 4-7
    refilled 4-9
    shelf life 4-6
    storage 4-6
TONER LOW 4-10, 7-C
    message 7-25
TONER LOW=OFF 4-10
TONER LOW=ON 4-10
tools, required 6-2
top cover removal 6-5
trailing edge sensor
    PS5 7-44
transfer roller
    PM 4-3
    removal and replacement 4-15 - 4-16
    replacement 4-16
transferring station, drum 5-24
TRAY 1/2/3 LOAD message 7-13
Tray 2 tray size switches 7-15
TRAY 2/3 EMPTY 7-C
TRAY X LOAD 7-C
tray, switch settings 5-9
troubleshooting
    aids 7-59
    Attendance messages 7-2

Error messages 7-2
general information 7-1
infrared B-38
Message Summary Table 7-2
messages 7-2
preliminary 7-1
Printer messages 7-2
quick checks 7-1
Status messages 7-2
Troubleshooting, IR port B-38

U

unpacking the printer 3-43
user maintenance 4-2

V

variable, customization 3-22
version number 3-26
vertical dark streaks 7-35, 7-46
vertical sync late (41.4) 7-28
vertical white streaks 7-35, 7-40
voltage checks 7-69
voltage test points 7-69

W

W0 JOB 600/A4 7-11
W1 IMAGE ADAPT 7-11
W2 INVALID PERS 7-11
W3 JOB ABORTED 7-11
W4 JOB 300/OFF 7-11
W5 JOB 300/LTR 7-11
W6 JOB 300/A4 7-11
W7 JOB 300/LGL 7-11
W8 JOB 600/OFF 7-11
W9 JOB 600/LTR 7-11
warm-up period 5-37
WARMING UP 7-C
white or blank pages 7-48
white streaks, vertical 7-40
wireless printing
See see infrared
writing station, drum 5-20

X

X LOAD 7-C
xon/xoff 3-34

C2001A-01
C2021A-01

S E R V I C E N O T E

SUPERSEDES None

HP LaserJet 4/4M Printers

LaserJet 4/4M printer ERROR 13 AND 41.3 messages:
Media Installation Instruction for the 250 Sheet Paper Cassette and the 500 Sheet Lower Cassette.

Serial Numbers: n/a

Background:
The HP LaserJet 4/4M printers are less tolerant than its predecessors when feeding out-of-spec, damaged, or improperly manufactured paper. Marginal or out-of-spec media that would feed through a LaserJet II or a LaserJet III may not perform as well in a LaserJet 4/4M.

To obtain optimum results, Hewlett-Packard recommends the use of high quality paper designed for use in laser printers or photocopiers. It is important for print media and environmental conditions to fall within the printer's published specifications. For situations where questionable media is being used or where environmental specifications are not followed, the results may be less than optimal. These less than optimal results are most commonly reported as ERROR 13 and ERROR 41.3 messages. Two different situations exist that may produce these errors. One is when feeding paper from the optional 500 sheet lower cassette and the other is when using the standard 250 sheet paper cassette.

Solution:
Some general paper installations instructions apply to both the lower cassette and the paper cassette. Other instructions apply specifically to one tray or the other.

Paper Installation Instructions for Both the Lower Cassette and the Paper Cassette:

1. Make sure that the paper fits the specifications listed in the LaserJet 4/4M User's Manual or the Paper Specifications guide. Multi-feeds (ERROR 41.3) and paper

DATE 19 November 1993

ADMINISTRATIVE INFORMATION

SERVICE NOTE CLASSIFICATION:

INFORMATION ONLY

AUTHOR:	ENTITY:	ADDITIONAL INFORMATION:
KLB	4600	

© 1993 HEWLETT-PACKARD COMPANY
PRINTED IN U.S.A.

HEWLETT PACKARD

jams (ERROR 13) are commonly caused by paper that is too heavy, rough, smooth, or otherwise does not adhere to the printer's specifications.

2. Do not feed paper through the printer more than one time. After the page has passed through the printer once the moisture content of the paper has decreased and static will be more prevalent. This can lead to paper handling problems.

3. When filling the tray adhere to the following steps:

   a. Make sure the paper is resting flush against the rear of the tray.

   b. Verify that the paper is under the corner tab in the front left corner of the tray.

   c. Only refill the tray when it is empty and do not place multiple weights or types of media in the tray at the same time. Load the paper in a continuous stack. Do not fill the tray with numerous, small stacks.

   d. Do not shuffle or fan the paper. you may "flex" the stack by holding both ends and bending it in the middle.

Optional 500 Sheet Lower Cassette Paper Installation Instructions:

1. Adjust the rear paper guide to the size of media you will be using.

2. Do not overfill the tray. On the rear paper guide you will see 3 small arrows. Do not fill the tray above the bottom of these arrows.

3. Adjust the spring tension. When looking down at the lower cassette you will notice two green knobs. One of these knobs is for paper size. Adjust it to the size of the media that you are using. The other knob is for spring tension. It is extremely important, for optimal performance, that the tension is set correctly. When the tension is adjusted properly the purple indicator will be centered in the slot located to the left of the green knobs.

   To adjust the tension, lightly tap the front edge of the paper in the tray. The paper will bounce and then settle. If the indicator is not in the center of the slot, turn the green tension knob and then tap the paper once again. Repeat these steps until the indicator is centered in the slot. This process should be repeated whenever the tray is refilled. Note that if the indicator behaves erratically, the paper may not be flush against the rear paper guide. Push the paper to the rear and try again.

4. Adjust the right side paper guide so that it is flush against the edge of the paper.

250 Sheet Paper Cassette Media Installation Instructions

1. Do not overfill the tray. There are 3 small arrows on the inside of the tray towards the rear left corner. Do not fill the paper cassette above the bottom of these arrows.

S E R V I C E N O T E

SUPERSEDES None

HP LaserJet 4/4M printer

ERROR 13 AND 41.3 messages: Corner Tab installation instructions

Serial Numbers: n/a

Background:

The HP LaserJet 4/4M printer may be less tolerant than its predecessors when feeding out-of-spec, damaged, or improperly manufactured paper. To obtain optimum results, Hewlett-Packard recommends the use of high quality paper designed for use in laser printers or photocopiers. It is important for print media and environmental conditions to fall within the printer's published specifications. For situations where questionable media is being used or where environmental specifications are not followed, the results may be less than optimal. These less than optimal results are most commonly reported as ERROR 13 (Paper Jam) and ERROR 41.3 (Multi-feed) messages or as multi-feeds with no error displayed.

Solution:

The print media that is being used has a large effect on the number of errors observed. Different print media should always be tested when possible. If the media is out of the printer's specifications then paper feeding problems may occur. If the printer is displaying ERROR 41.3 or ERROR 13 messages resulting from multi-feeds, the paper being used is 16-20 lb. (60-75 g/m^2) and the errors are occurring when using the 250 sheet paper cassette then the following statements apply:

The HP LaserJet 4/4M printer was designed to accommodate a large variety of print media. Hewlett-Packard has developed a modification to

DATE 14 January 1994

ADMINISTRATIVE INFORMATION

SERVICE NOTE CLASSIFICATION: **MODIFICATION AVAILABLE**		
ACTION CATEGORY:	**AGREEABLE TIME**	■ PERFORMANCE ENHANCEMENT ☐ SERVICE/RELIABILITY ENHANCEMENT
LOCATION CATEGORY:	■ CUSTOMER INSTALLABLE ☐ ON-SITE ☐ HP LOCATION	AVAILABLE UNTIL: 14 January 1995
AUTHOR: KLB	ENTITY: 4600	ADDITIONAL INFORMATION:

© 1994 HEWLETT-PACKARD COMPANY
PRINTED IN U.S.A.

HEWLETT PACKARD

help increase the paper feeding performance on lighter weight (i.e., 16-20 lb. or 60-75 g/m^2) papers when the print media is being pulled from the 250 sheet paper cassette. This modified corner tab, p/n RA2- 1999-000CN, can easily be installed into the 250 sheet paper cassette. Hewlett-Packard's support providers should obtain the modified corner tab from Support Materials Organization (SMO) or from Support Materials Europe (SME). Customers may obtain the corner tab free of charge by calling HP Distribution at (303)-339-7009 when in the United States or from the European Customer Support Center (ECSC) at the following numbers when in Europe:

Language:

English	(+31)-20-682-8291
Dutch	(+31)-20-681-6473
French	(+31)-20-681-8260
German	(+31)-20-681-7174

Installation of the modified corner tab does improve the paper-feeding performance of lighter weight papers in most cases.

Installation Instructions for the Modified Corner Tab:

1. Remove paper and push down on the tray lift plate.

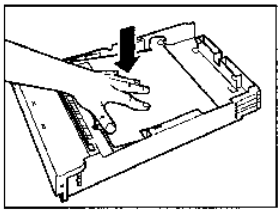

2. Pull the plastic tab retaining the metal corner tab toward the center of the tray.

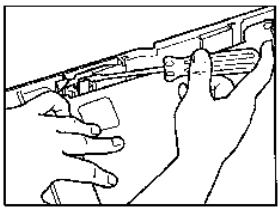

3. Rotate the old corner tab slightly and lift it off of the mounting pin.

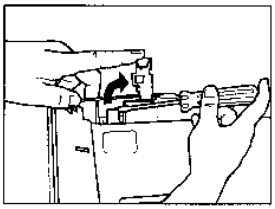

4. Reverse the procedure to install the replacement corner tab.

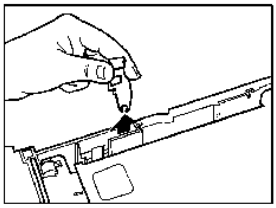

These corner tabs may not solve all paper feeding problems. They are designed to reduce multi-feeds and ERROR 41.3 messages associated with lightweight paper (i.e. 16-20 lb. or 60-75 g/m^2) but may not overcome paper problems that would otherwise cause paper handling issues. The original tabs should be retained for use with heavier print media.

S E R V I C E N O T E

SUPERSEDES None

HP LaserJet 4/4M printer

Serial Numbers: USBB074298-USBB081811
USBB099540-USBB190983
USBC085451-USBC093129
USBC112090-USBC234957
USTB000101-USTB007397
USTC000101-USTC010123

LaserJet 4/4M paper jams in output assembly

Situation:

A change in the manufacturing process increased the potential for an accordion jam. An accordion jam is a paper jam that typically occurs on the last few inches of the page causing the page to be folded like a fan. Only US made printers in the serial number range listed above were affected by this change. Some types of paper tend to interfere with the output roller holders during output causing a jam to occur. The printer keeps trying to push the page out causing the page to be folded. This is called an accordion jam.

Solution:

If paper is jamming in the printer it does not necessarily mean that replacing the output roller holders will cure the problem. The situation needs to be qualified before the rollers are replaced. When an accordion jam occurs

DATE 14 January 1994

ADMINISTRATIVE INFORMATION

SERVICE NOTE CLASSIFICATION:

MODIFICATION RECOMMENDED

ACTION CATEGORY:	☐ IMMEDIATELY ■ ON SPECIFIED FAILURE ☐ AGREEABLE TIME	STANDARDS:	LABOR: 0.5 hours + parts No Travel Authorized
LOCATION CATEGORY:	☐ CUSTOMER INSTALLABLE ☐ ON-SITE ■ HP LOCATION	SERVICE INVENTORY:	☐ RETURN ☐ SCRAP ☐ SEE TEXT
		USED PARTS:	☐ RETURN ■ SCRAP ☐ SEE TEXT
AVAILABILITY:	PRODUCT'S SUPPORT LIFE	RESPONSIBLE UNTIL: 14 January 1996	
AUTHOR: KLB	ENTITY: 4600	ADDITIONAL INFORMATION: On all CSO's enter REPAIR TYPE as "02G" and REPAIR CLASS as "SN". In the Comment field refer to the Service Note Number.	

© 1994 HEWLETT-PACKARD COMPANY
PRINTED IN U.S.A.

HEWLETT PACKARD

an accordion jam occurs replacing the output roller holders (quantity of 4) part number RF5-0425-000CN will generally resolve the problem. If the jam is not an accordion jam then replacing the output rollers will not fix it. If the printer is having excessive paper jams that are not accordion jams then do not replace the output roller holders. Proceed as directed in the LaserJet 4/4M Printer Service Manual pages 7-26 through 7-33 for troubleshooting 13 Paper Jam Messages.

When replacing the output roller holders refer to the attached figure or to the LaserJet 4/4M Printer Service Manual page 8-23 figure 8-13. Remove the Upper Delivery Guide p/n RF5-0532-000CN reference number (r/n) 17 and the Upper Delivery Roller p/n RF5-0534-000CN r/n 16 to gain access to the Output Roller Holders. When replacing the Output Roller Holders make sure that the Compression Springs p/n RS5-2185-000CN r/n 13 are switched from the old output roller holders to the new holders and seated properly on the spring pads in the Output Assembly.

Copyright© 1996
Hewlett-Packard Company
Printed in USA 3/96

Manual Part No.
C3916-90984

C3916-90984